Specification - Curtain Wall ECW50.Spec.i

Introduction

Part of the worldwide Exlabesa brand, Exlabesa Building Systems Ltd. is an independent aluminum glazing system supplier based in South Yorkshire.
At our Doncaster site we Extrude, Thermally Improve, Powder Coat and Anodize Extrusions for the Facade Industry.
Materials are normally supplied ex-stock from our warehousing facility and include Windows, Doors, Ground Floor Treatment and Curtain Walling Profiles as well as all Hardware, Components & Tooling necessary for Manufacture.
The systems are sold exclusively to a network of officially approved Exlabesa UK Systems distributors throughout the UK & the Continent.
We are committed to responding to our customers needs in every way possible, from product offerings, environmental responsibility and communication to our final delivery.

Product Information

- 50mm channel & plate curtain wall system
- Mullion sizes from 70mm to 220mm available
- Transom sizes from 55mm to 195mm available
- Polyamide thermal break for improved thermal efficiency
- 28mm glazing as standard
- Window & door insets available
- Internal & external reinforcing bars available for bigger spans
- Range of external caps available

Materials

- Extruded aluminum dimensional tolerance is to BS EN 755:9
- Extruded aluminum mechanical characteristics is to BS EN 755:2
- Extruded aluminum chemical composition is to BS EN 573:3
- Silver anodized material is to QUALANOD
- Anolok bronze 547 anodized material to special order
- Powder coated material is to QUALICOAT
- Gasketry is manufactured in accordance with BS EN 3734:1997
- Polyamide thermally broken aluminium is manufactured to BS EN 14024:2004

Testing

- Test certificates to CWCT and EN are available upon request.

Exlabesa Building Systems Ltd.
Ogden Road
Wheatley Hills
Doncaster
DN2 4SG

Tel: 01302 762500
Fax: 01302 762557
Email: sales@exlabesa.co.uk
Web: www.exlabesa.co.uk

Exlabesa Building Systems Ltd operate a policy of continuing development and reserve the right to amend and improve products without notification. However every effort will be made to ensure that updates are circulated to our clients.

Page Number	Page Contents	Latest Version
Index Pages		
ECW50.Spec.i	Specification - Curtain Wall	Sep 19
ECW50.Index.i	Index Page	Sep 19
ECW50.Index.ii	Index Page	Sep 19
Section 1 - General Arrangements		
ECW50.1.101	Transoms	Jul 16
ECW50.1.102	Transoms	Jul 16
ECW50.1.103	Transoms	Jul 16
ECW50.1.104	Transoms	Jul 16
ECW50.1.105	Mullions	Jul 16
ECW50.1.106	Mullions	Jul 16
ECW50.1.107	Mullions	Jul 16
ECW50.1.108	Mullions	Mar 18
ECW50.1.201	Transoms	Jul 16
ECW50.1.202	Transoms	Jul 16
ECW50.1.203	Transoms	Jul 16
ECW50.1.204	Transoms	Jul 16
ECW50.1.205	Mullions	Jul 16
ECW50.1.206	Mullions	Jul 16
ECW50.1.207	Mullions	Jul 16
ECW50.1.208	Mullions	Mar 18
ECW50.1.301	90° Corner	Jul 16
ECW50.1.302	Casement Inserts	Jul 16
ECW50.1.303	165mm Mullion over Transom	Jul 16
ECW50.1.304	Blank	Jul 16
Section 2 - Sections Identification		
ECW50.2.101	Mullions	Sep 18
ECW50.2.102	Mullions Reinforcing Spigot	Mar 18
ECW50.2.103	Transoms	Jul 16
ECW50.2.104	Plates & Closers	Jul 16
ECW50.2.105	Caps	Jul 16
ECW50.2.106	Add-On Reinforcing	Sep 17
ECW50.2.107	Brackets	Jul 16
ECW50.2.108	Glass Supports	Jul 16
ECW50.2.109	Mullion Reinforcement	Mar 18
ECW50.2.110	Mullion Reinforcement	Jul 16
ECW50.2.111	Mullion Reinforcement	Jul 16
ECW50.2.112	Mullion Reinforcement	Jul 16
ECW50.2.113	Mullion Reinforcement	Jul 16
ECW50.2.114	Mullion Reinfrocement	Mar 18
ECW50.2.201	Wind Load Charts	Mar 18
ECW50.2.202	Wind Load Charts	Mar 18
ECW50.2.203	Wind Load Charts	Mar 18
ECW50.2.204	Wind Load Charts	Mar 18
ECW50.2.205	Wind Load Charts	Mar 18
ECW50.2.206	Wind Load Charts	Mar 18

Page Number	Page Contents	Latest Version
Section 3 - Accessories		
ECW50.3.101	Accessories	Jul 16
ECW50.3.102	Accessories	Jul 18
ECW50.3.103	Accessories	Mar 18
ECW50.3.104	Blank	Jul 16
Section 4 - Glazing & Thermal Properties		
ECW50.4.101	Pocket Closers	Jul 16
ECW50.4.102	Single Glazing	Jul 16
ECW50.4.103	Glazing - 16mm Thermal Break	Jul 16
ECW50.4.104	Frame U-Values	Jul 16
ECW50.4.105	Glazing - 22mm Thermal Break	Jul 16
ECW50.4.106	Frame U-Values	Jul 16
ECW50.4.107	Glazing - 28mm Thermal Break	Sep 18
ECW50.4.108	Frame U-Values	Jan 18
ECW50.4.109	Glazing - 34mm Thermal Break	Sep 18
ECW50.4.110	Frame U-Values	Jul 16
Section 5 - Preparation		
ECW50.5.101	Cutting & Glass Allowance	Nov 17
ECW50.5.102	Mullion Drilling	Mar 15
ECW50.5.103	Mullion Drilling	Mar 18
ECW50.5.104	Transom Preparation	Jul 16
ECW50.5.105	Transom Shear Block	Sep 17
ECW50.5.106	Transom Shear Block	Sep 17
ECW50.5.107	Transom Shear Block	Jul 16
ECW50.5.108	Transom Shear Block	Nov 17
ECW50.5.109	Transom Shear Block	Mar 18
ECW50.5.110	Aluminium Pressure Plate	Sep 19
ECW50.5.111	Transom Drainage	Jul 16
ECW50.5.112	Mullion into Transom Joint	Mar 18
ECW50.5.113	Mullion into Transom Joint	Feb 18
ECW50.5.114	Mullion into Transom Joint	Jul 16
Section 6 - Assembly		
ECW50.6.101	Typical Transom & Mullion Joint	Jul 16
ECW50.6.102	Drain Spouts	Jun 18
ECW50.6.103	Assembly Cap & Plates	Jul 18
ECW50.6.104	Mullion Expansion Joint	Jul 16
ECW50.6.105	Drainage / Ventilation Spouts	Nov 18
ECW50.6.106	Blank	Apr 18
Section 7 - Installation		
ECW50.7.101	Bracketry	Jul 16
ECW50.7.102	Fixing Brackets	Mar 15
ECW50.7.103	Floor & Soffit Spigot	Jul 16
ECW50.7.104	Floor & Soffit Spigot	Jul 16
ECW50.7.105	Installation Details - Jamb	Jul 16
ECW50.7.106	Installation Details - Head & Cill	Jul 16
Section 8 - Glazing		
ECW50.8.101	Glazing	Jul 16

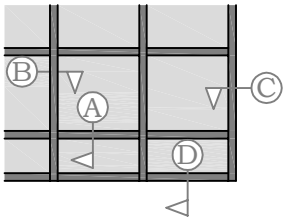
B
A
C
D

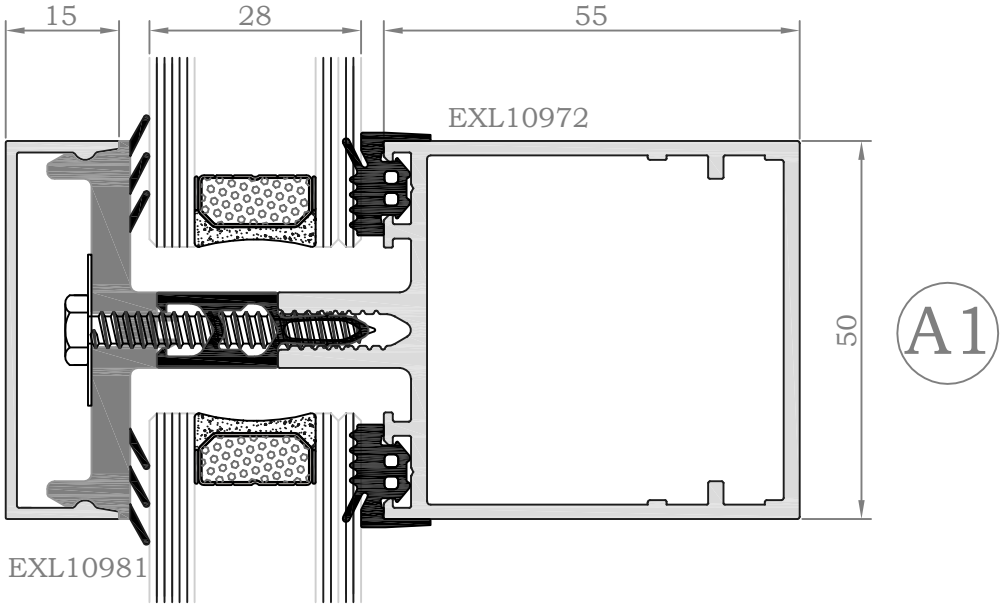
15
28
55
EXL10972
50
A1
EXL10981

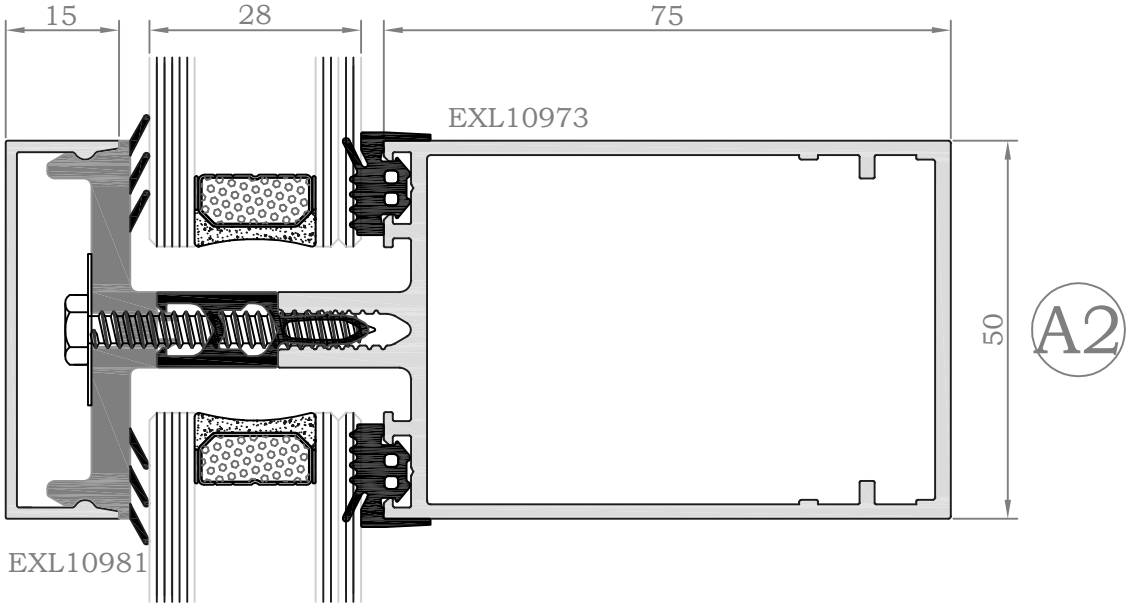
15
28
75
EXL10973
50
A2
EXL10981

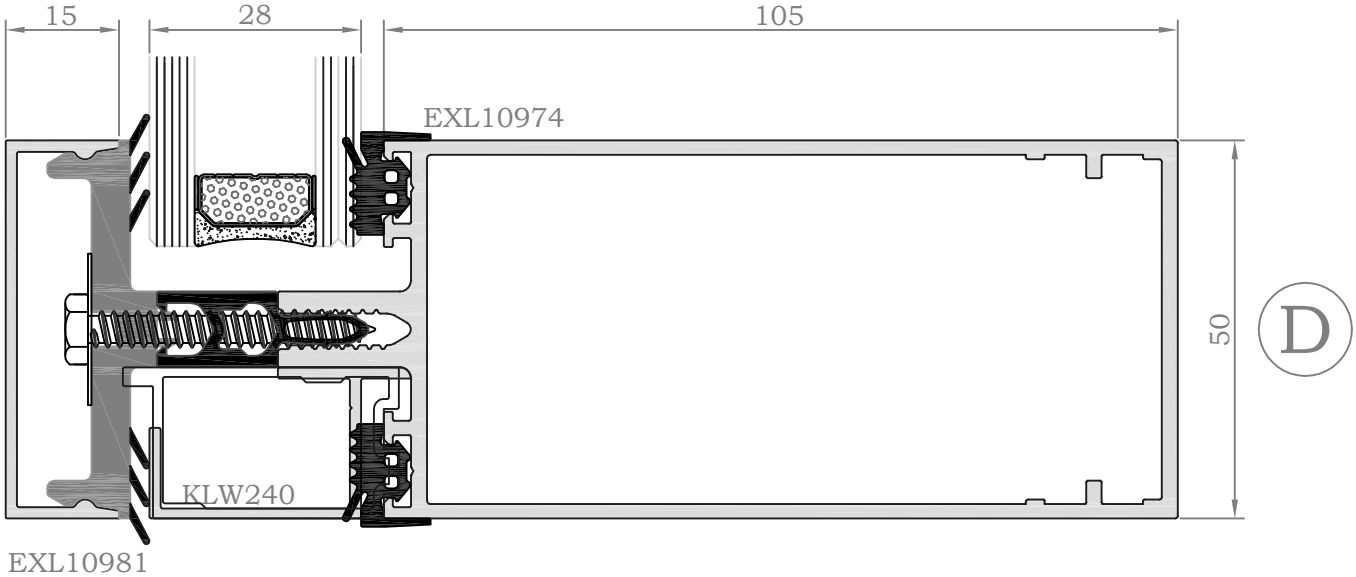
15
28
105
EXL10974
50
D
KLW240
EXL10981

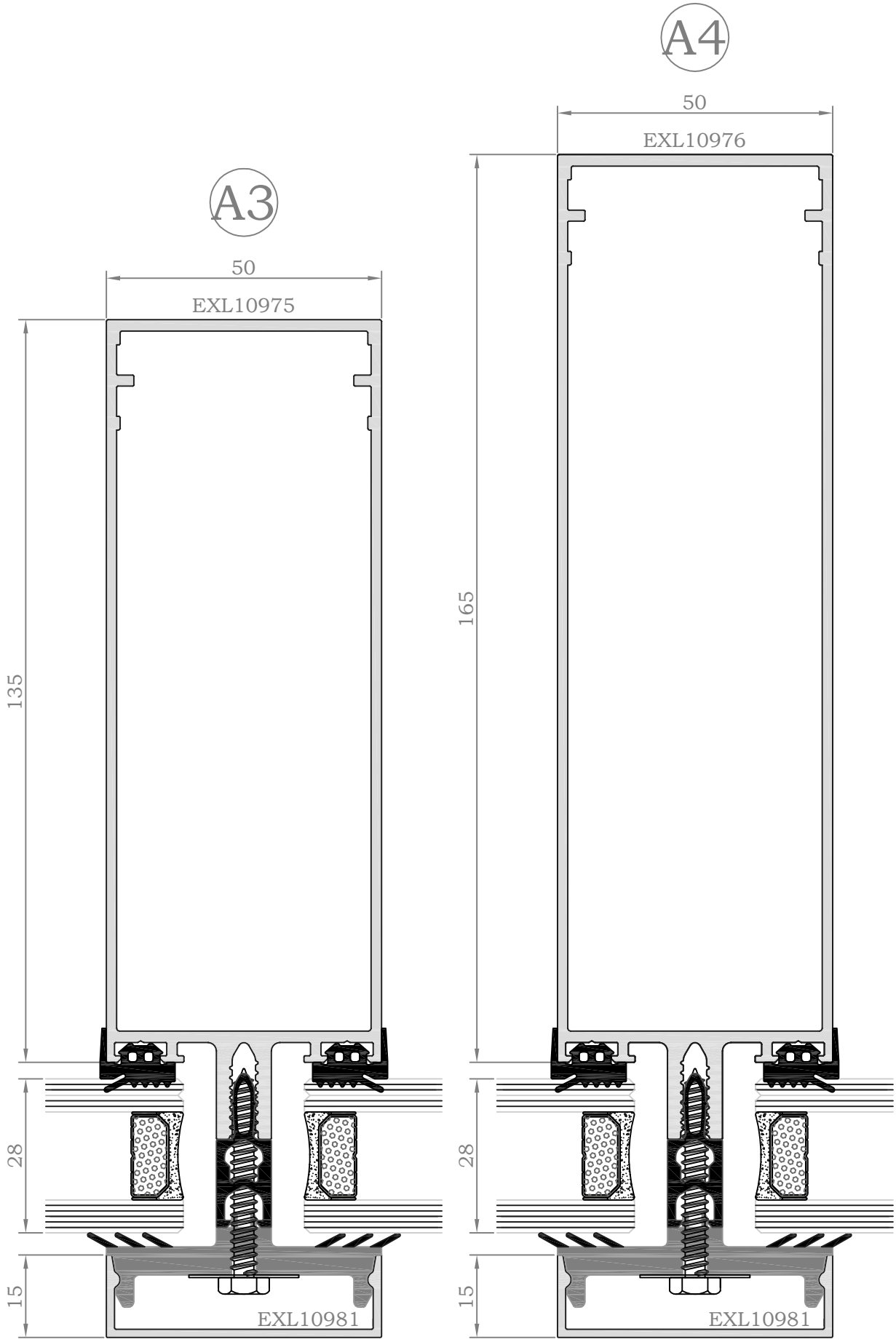
A3
50
EXL10975
135
28
15
EXL10981
A4
50
EXL10976
165
28
15
EXL10981

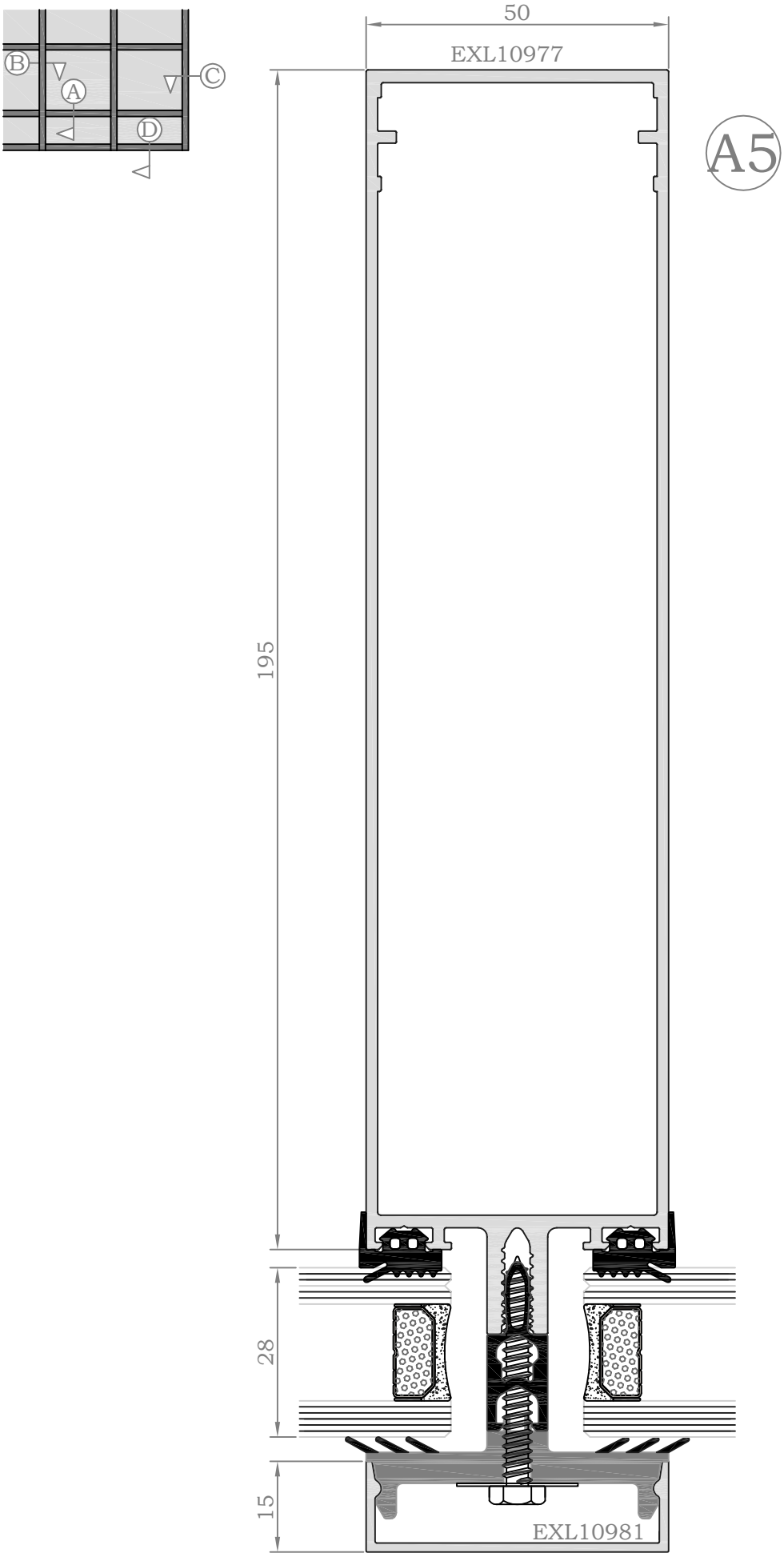
B
A
C
D
50
EXL10977
A5
195
28
15
EXL10981

Transom

ECW50.1.104

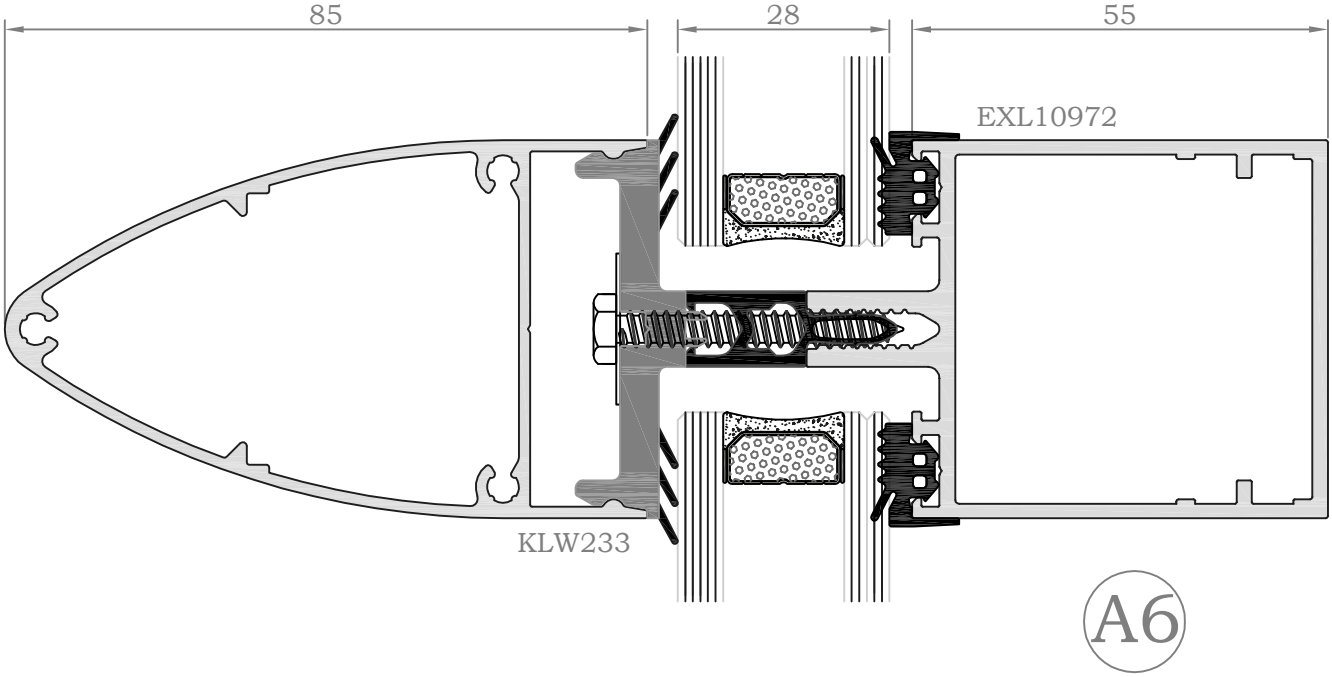

Jul 16

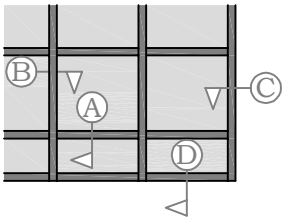
B
A
C
D

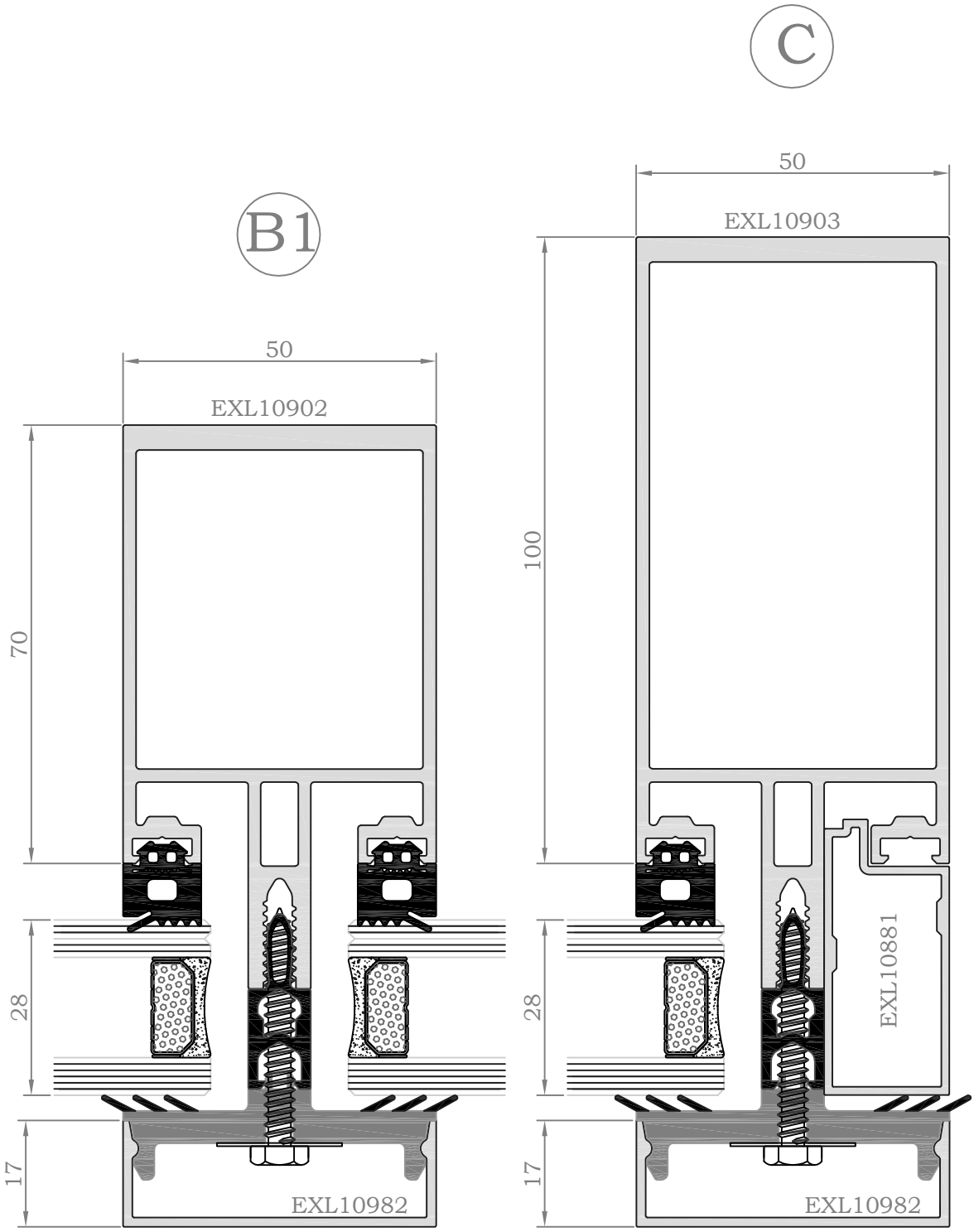
C
50
EXL10903
100
EXL10881
28
17
EXL10982
B1
50
EXL10902
70
28
17
EXL10982

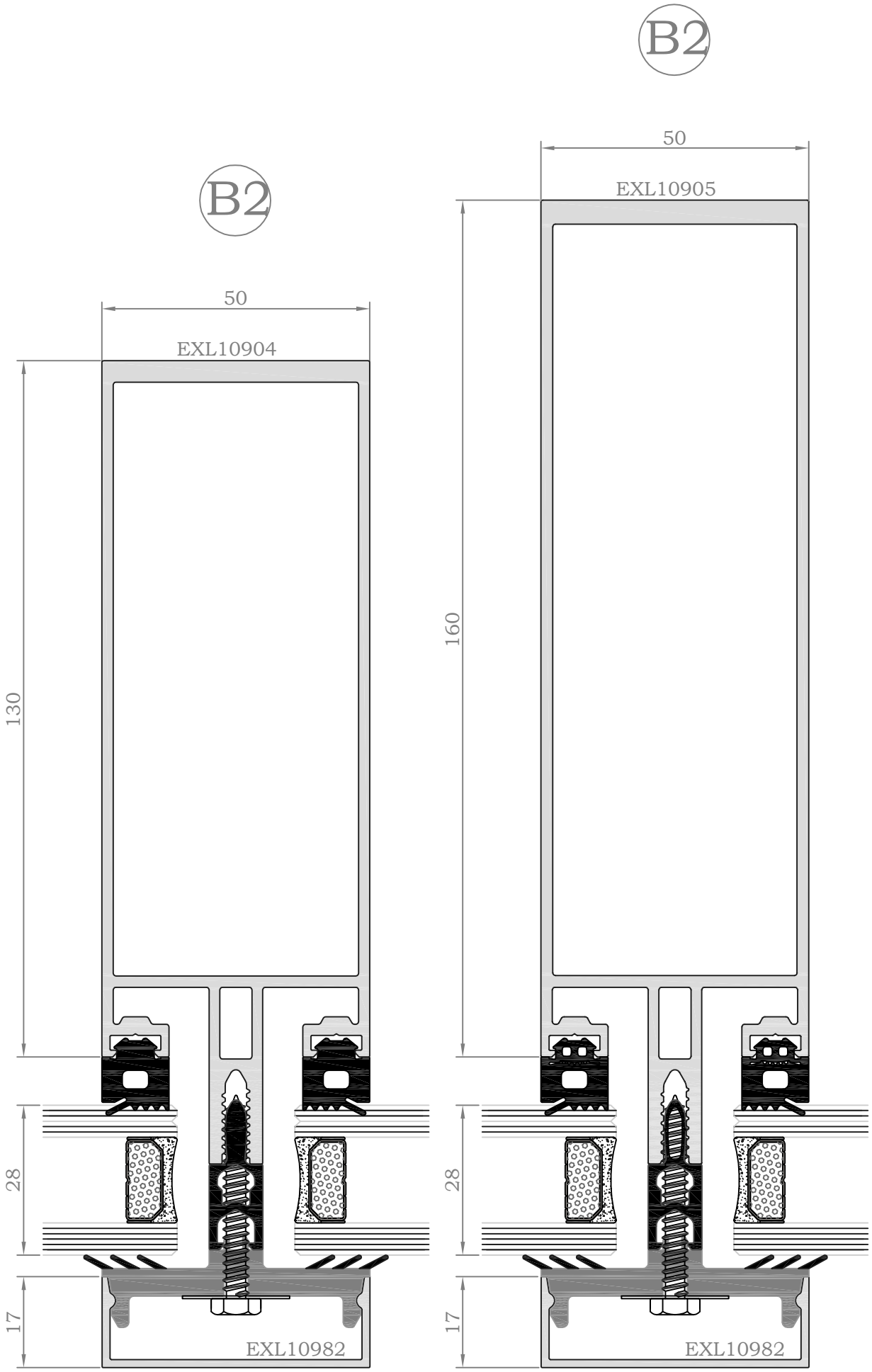
B2
50
EXL10904
130
28
17
EXL10982
B2
50
EXL10905
160
28
17
EXL10982

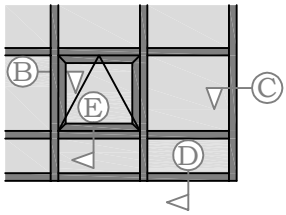

B2

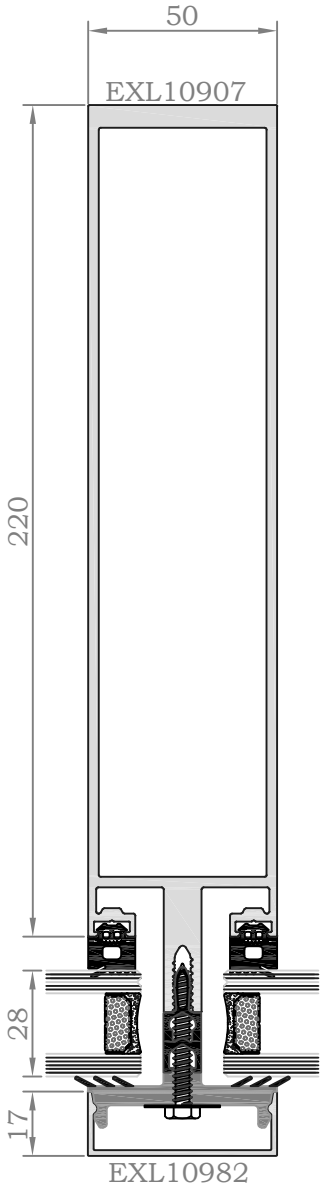

Scale - half full size

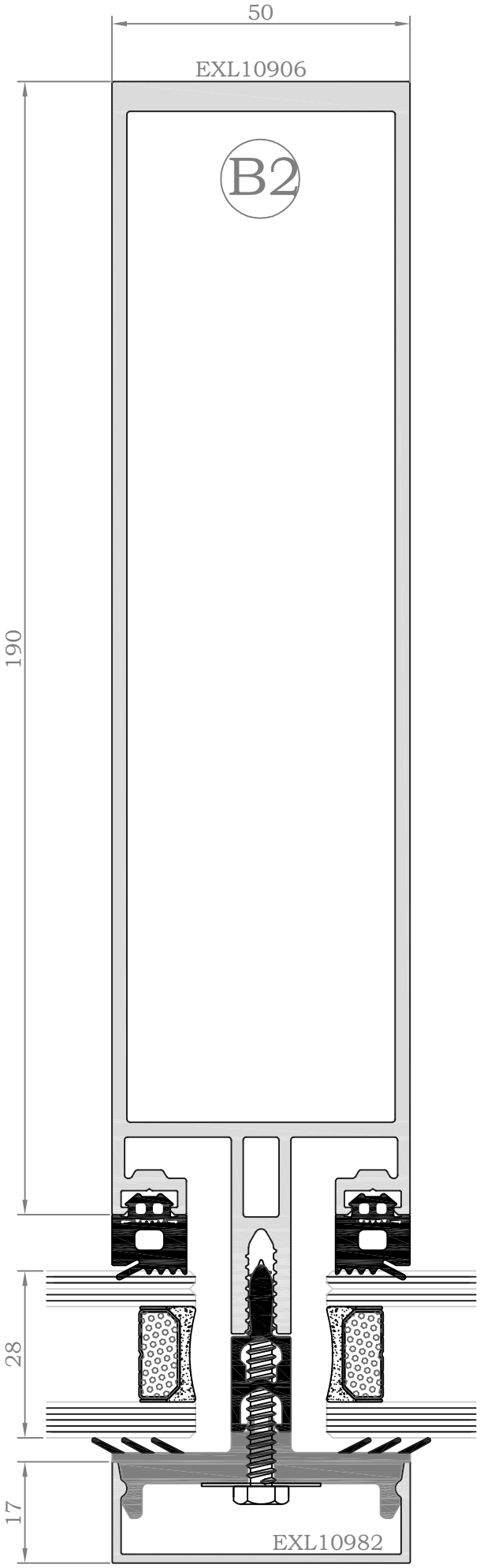

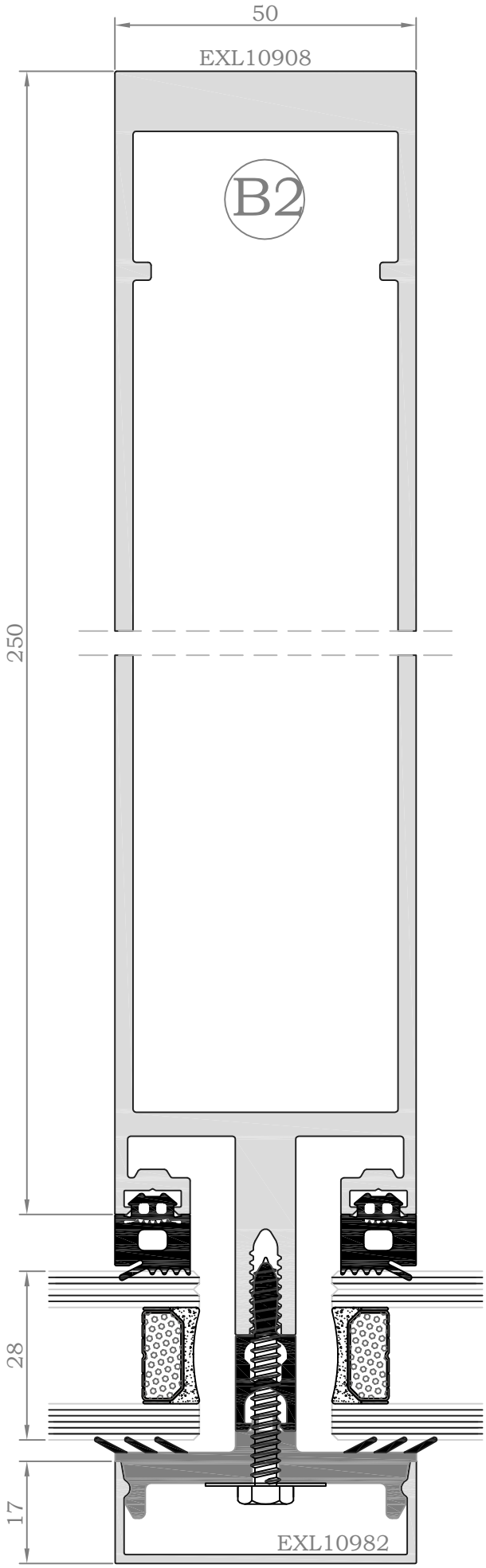
50
EXL10908
B2
250
28
17
EXL10982

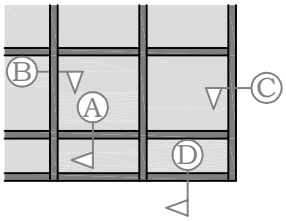
B
A
C
D

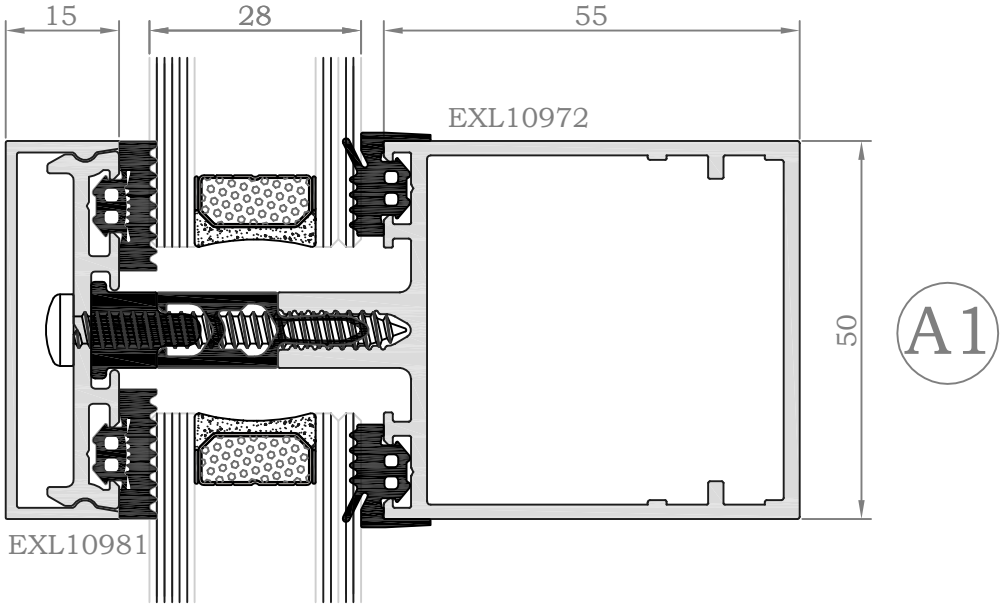
15
28
55
EXL10972
50
A1
EXL10981

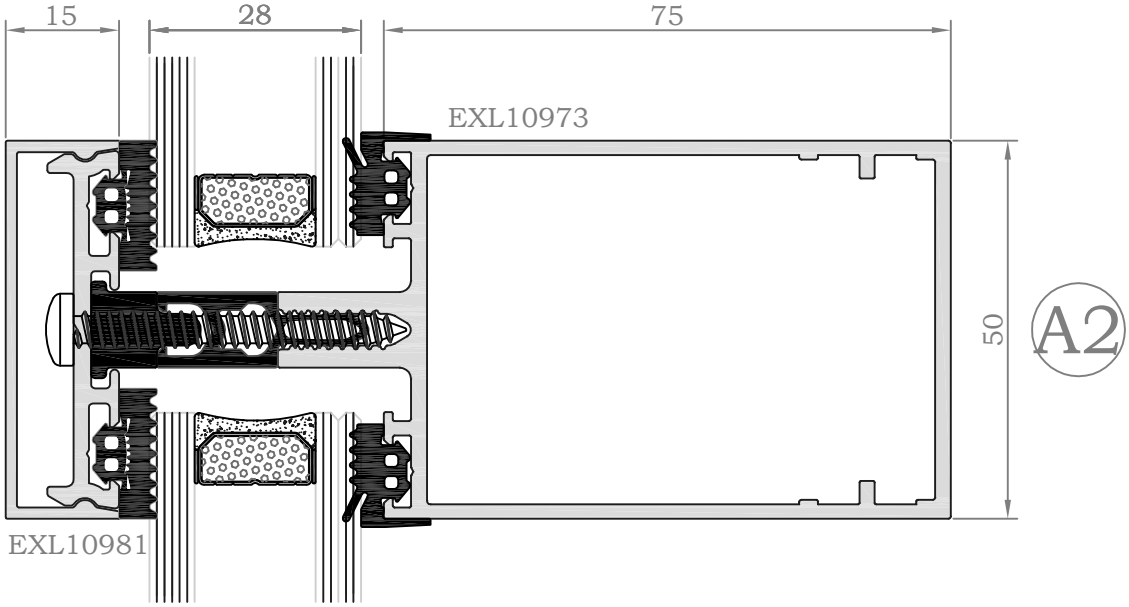
15
28
75
EXL10973
50
A2
EXL10981

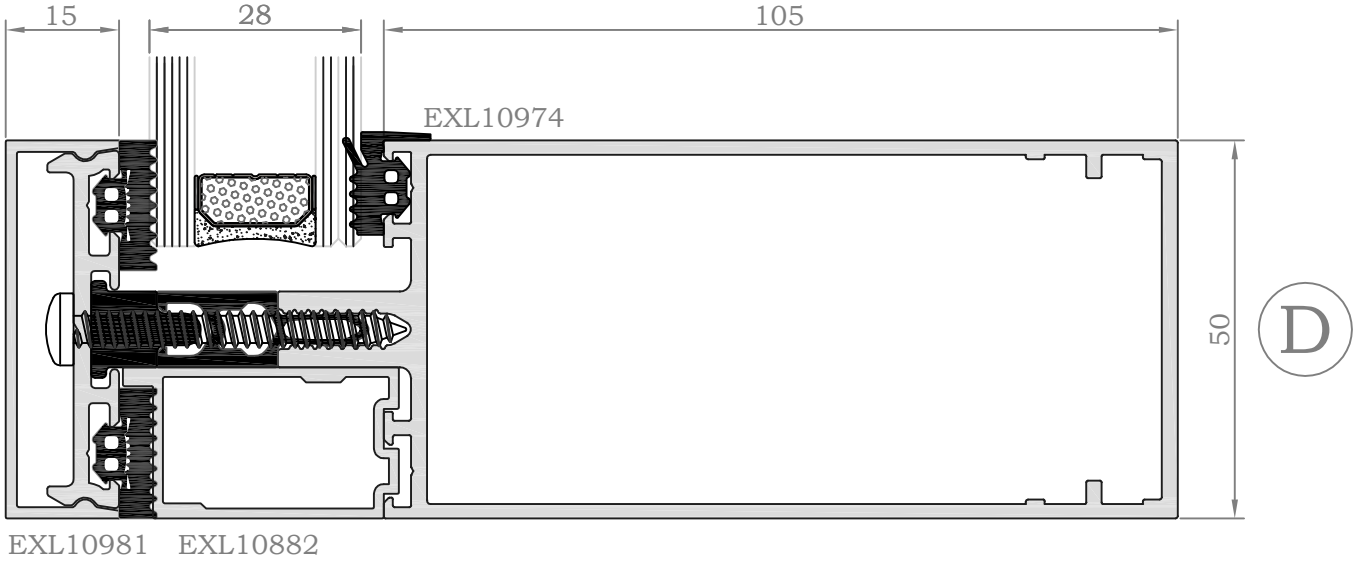
15
28
105
EXL10974
50
D
EXL10981
EXL10882

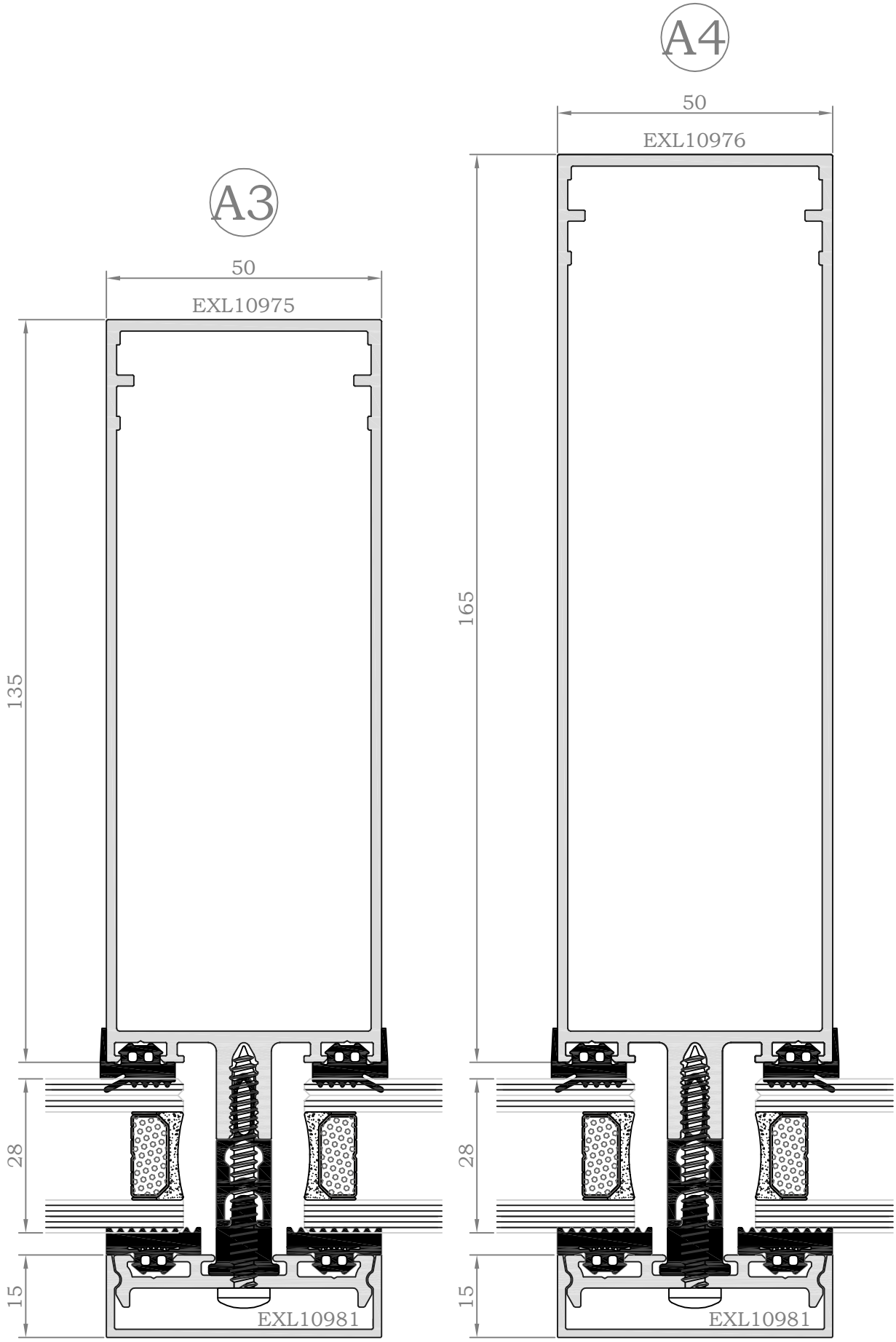
A3
50
EXL10975
135
28
15
EXL10981
A4
50
EXL10976
165
28
15
EXL10981

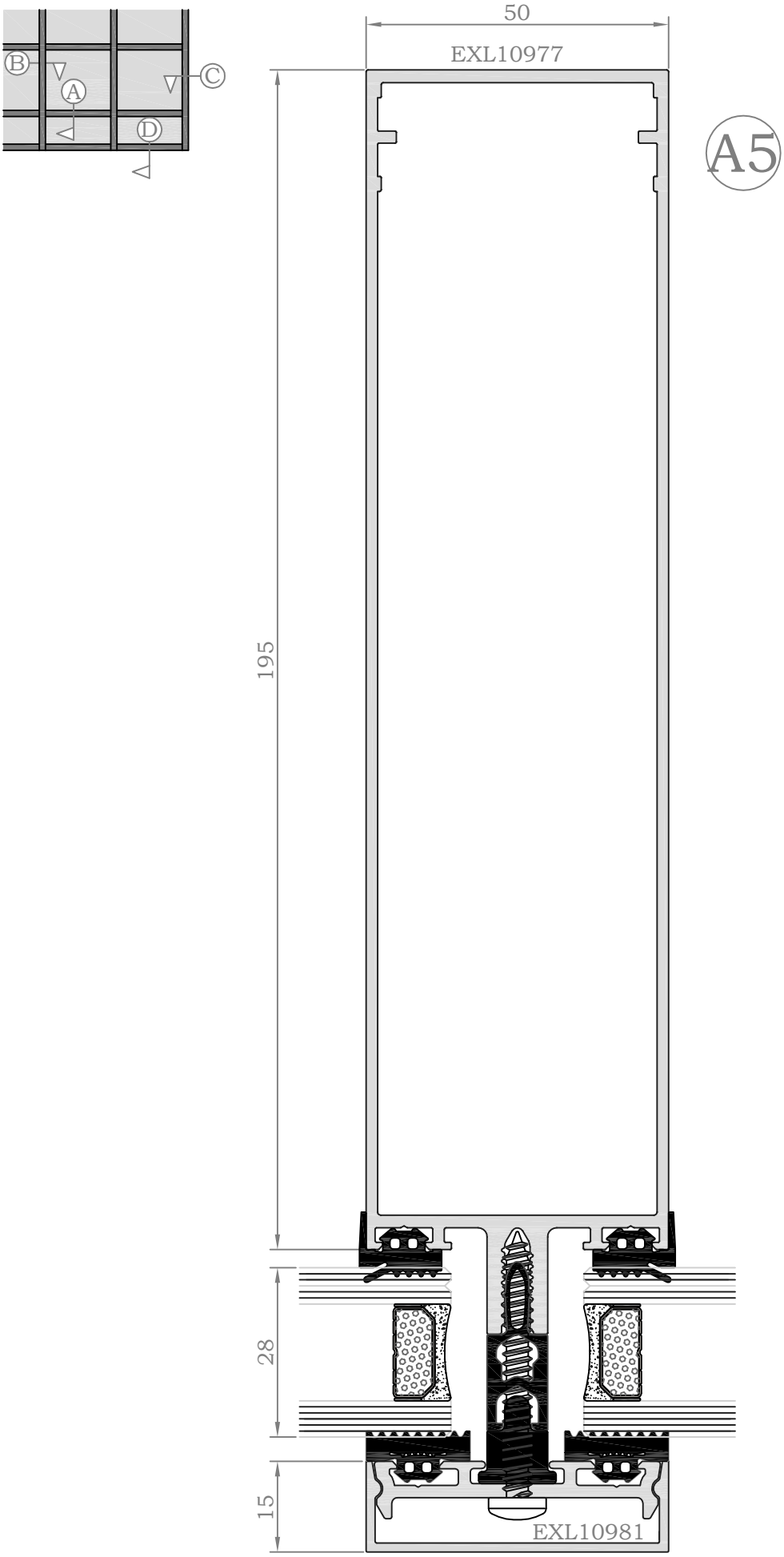
B
A
C
D
50
EXL10977
A5
195
28
15
EXL10981

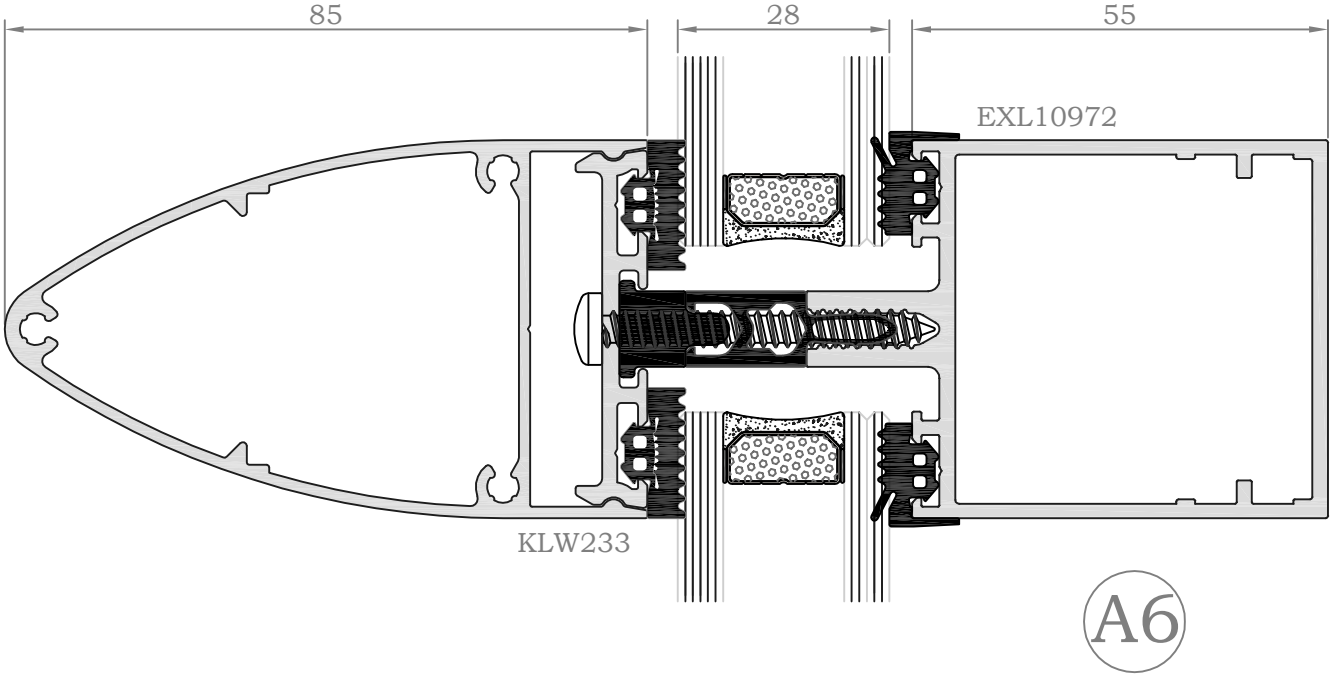
85
28
55
EXL10972
KLW233
A6

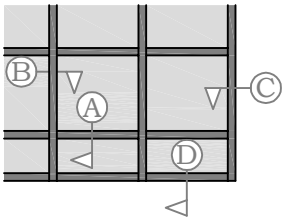
B
A
C
D

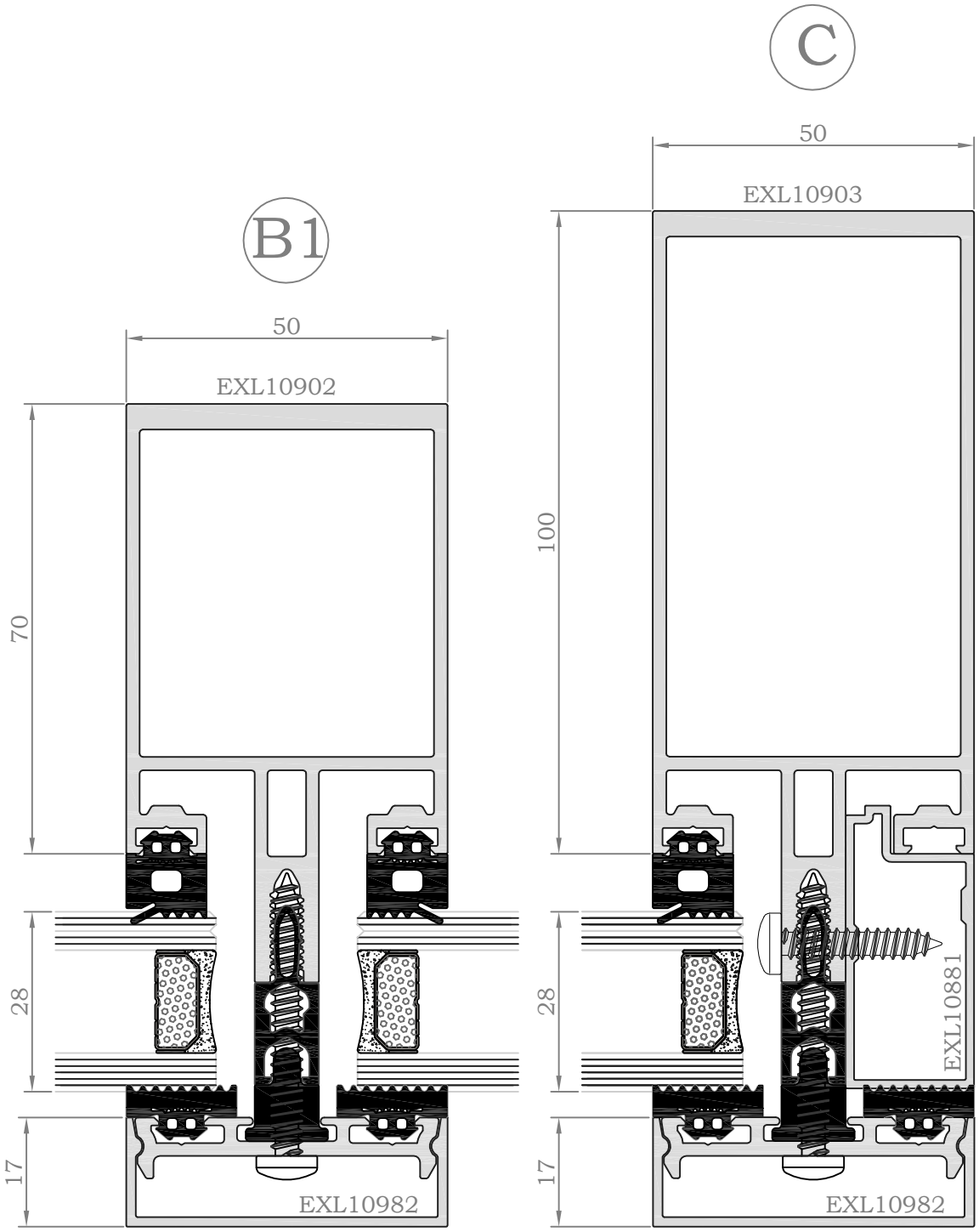
B1
50
EXL10902
70
28
17
EXL10982
C
50
EXL10903
100
28
17
EXL10881
EXL10982

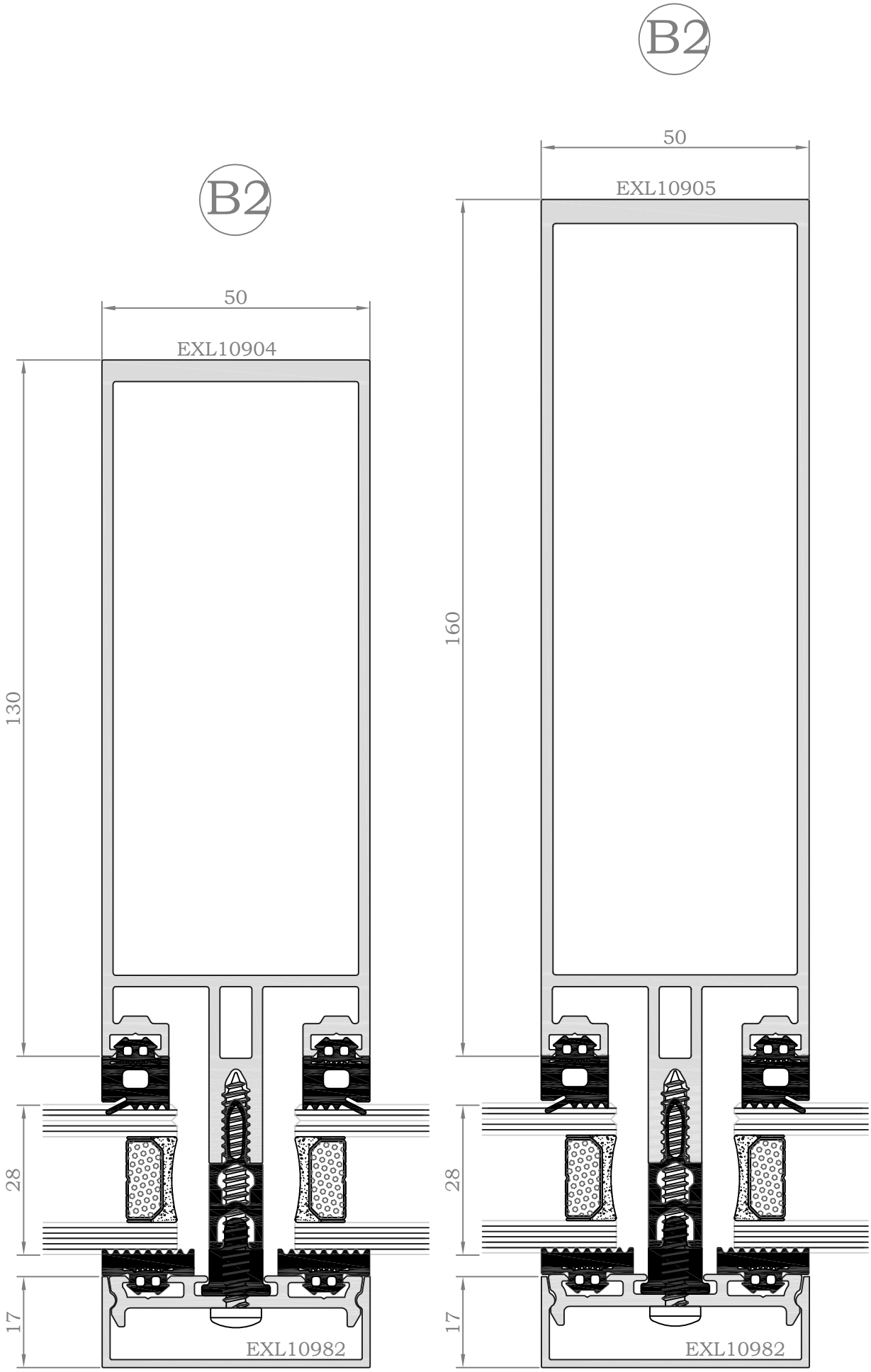
B2
50
EXL10904
130
28
17
EXL10982
B2
50
EXL10905
160
28
17
EXL10982

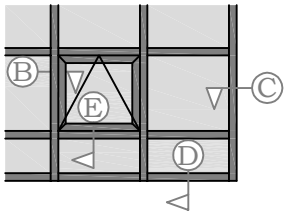

B2

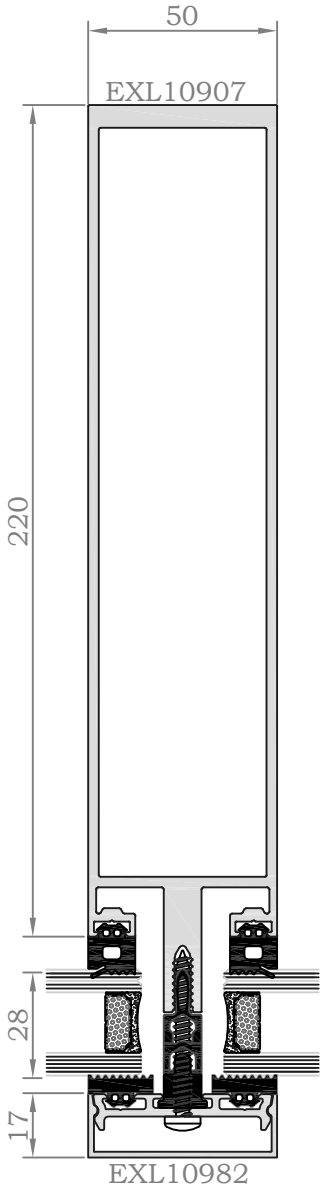

Scale - half full size

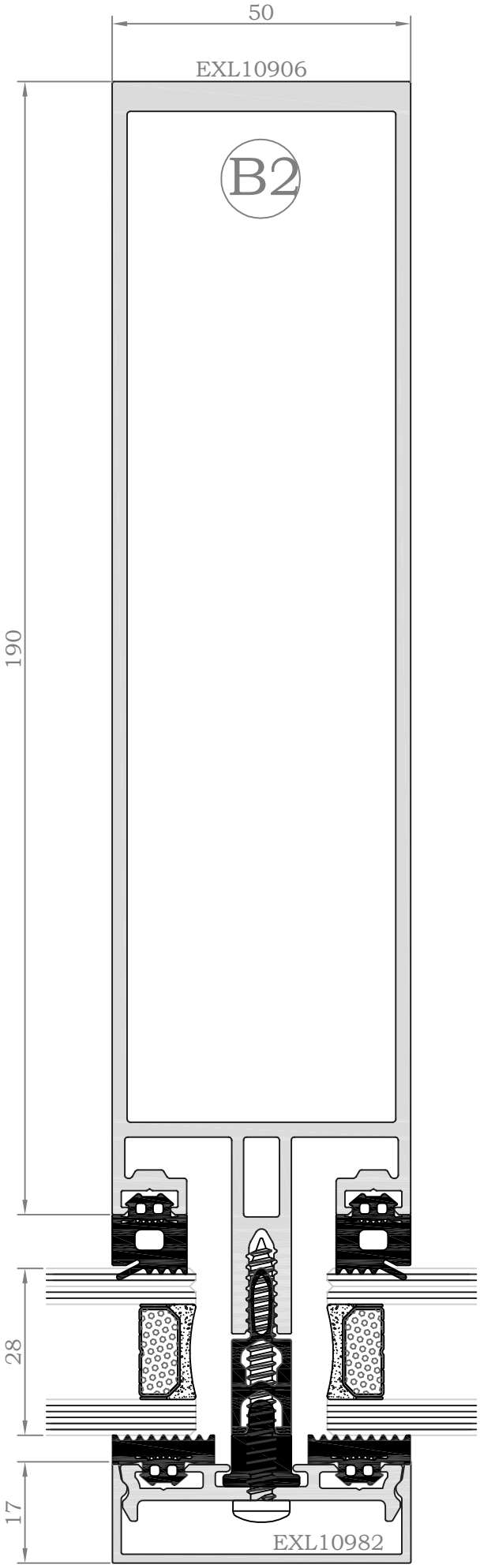

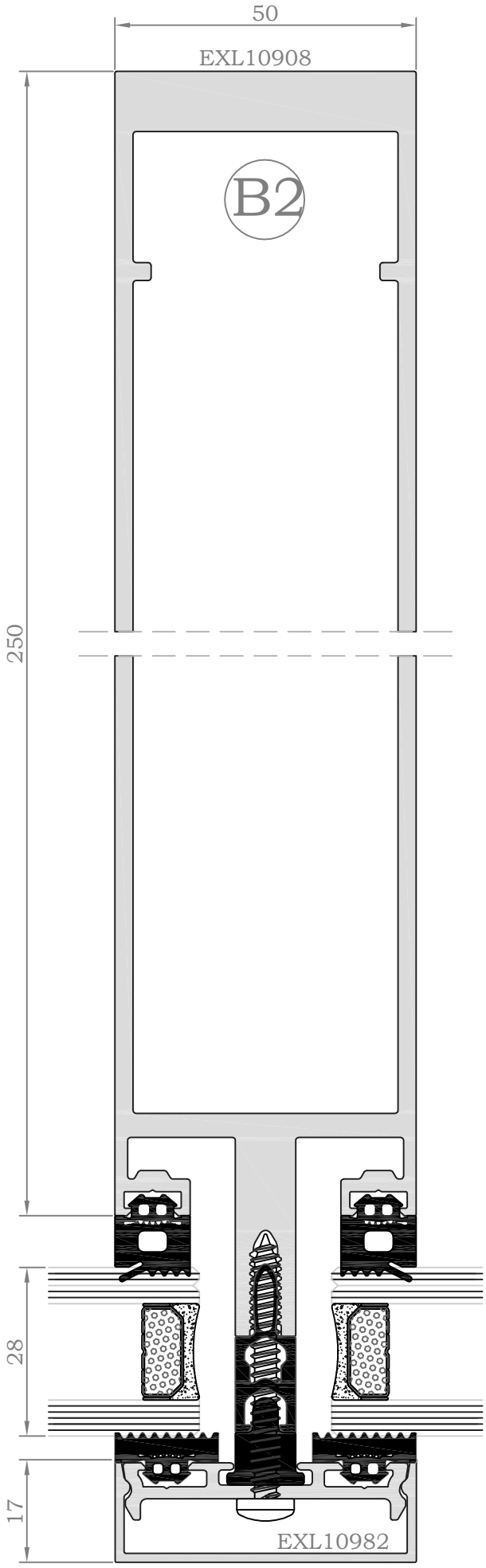
50
EXL10908
B2
250
28
17
EXL10982

ECW50.1.301

90° Corner

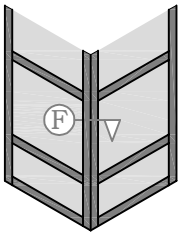

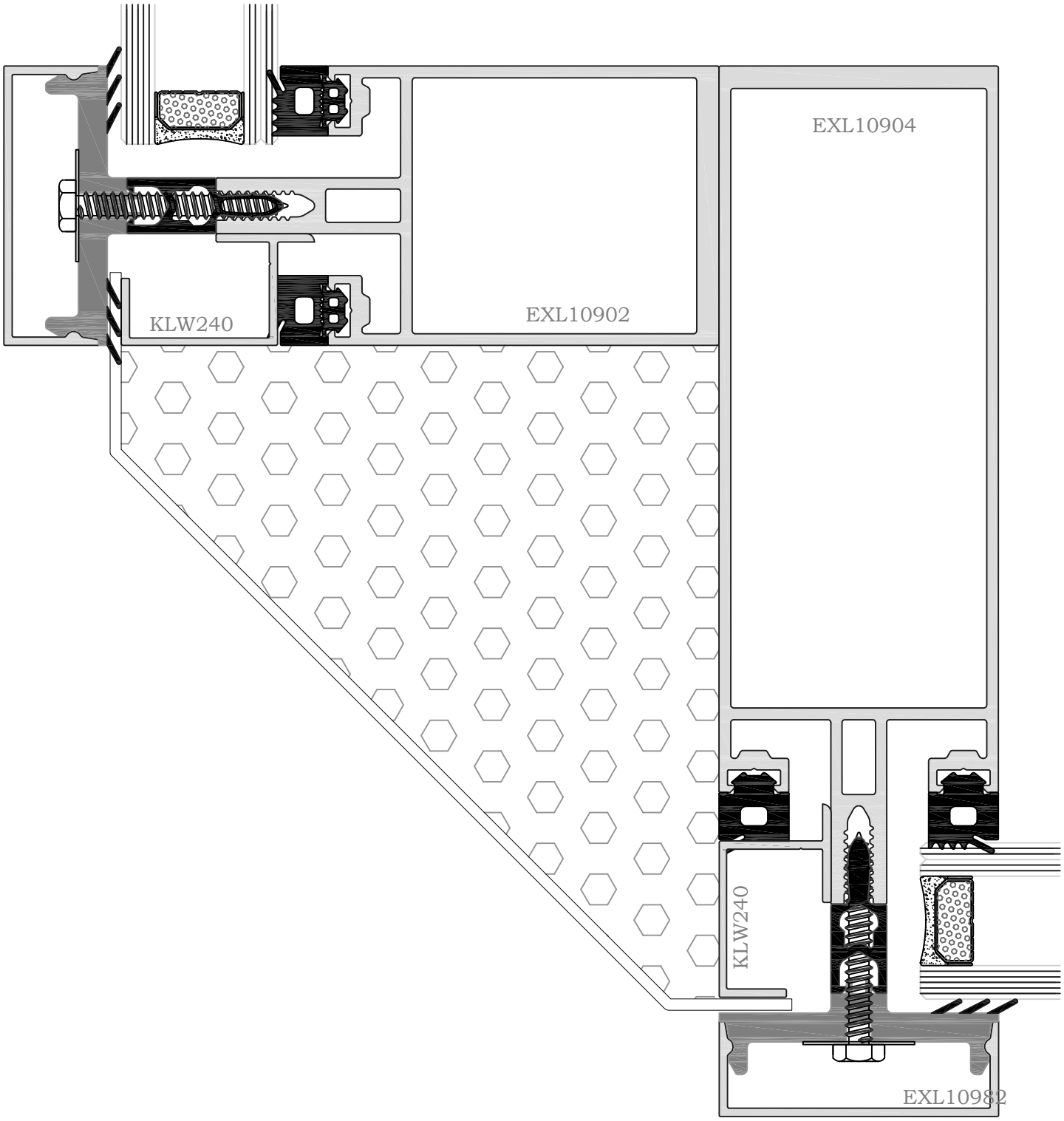

Jul 16

KCW51 Casement Insert

ECW50.1.302

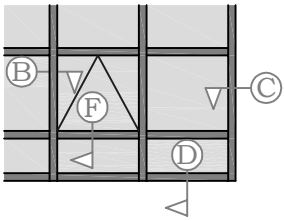

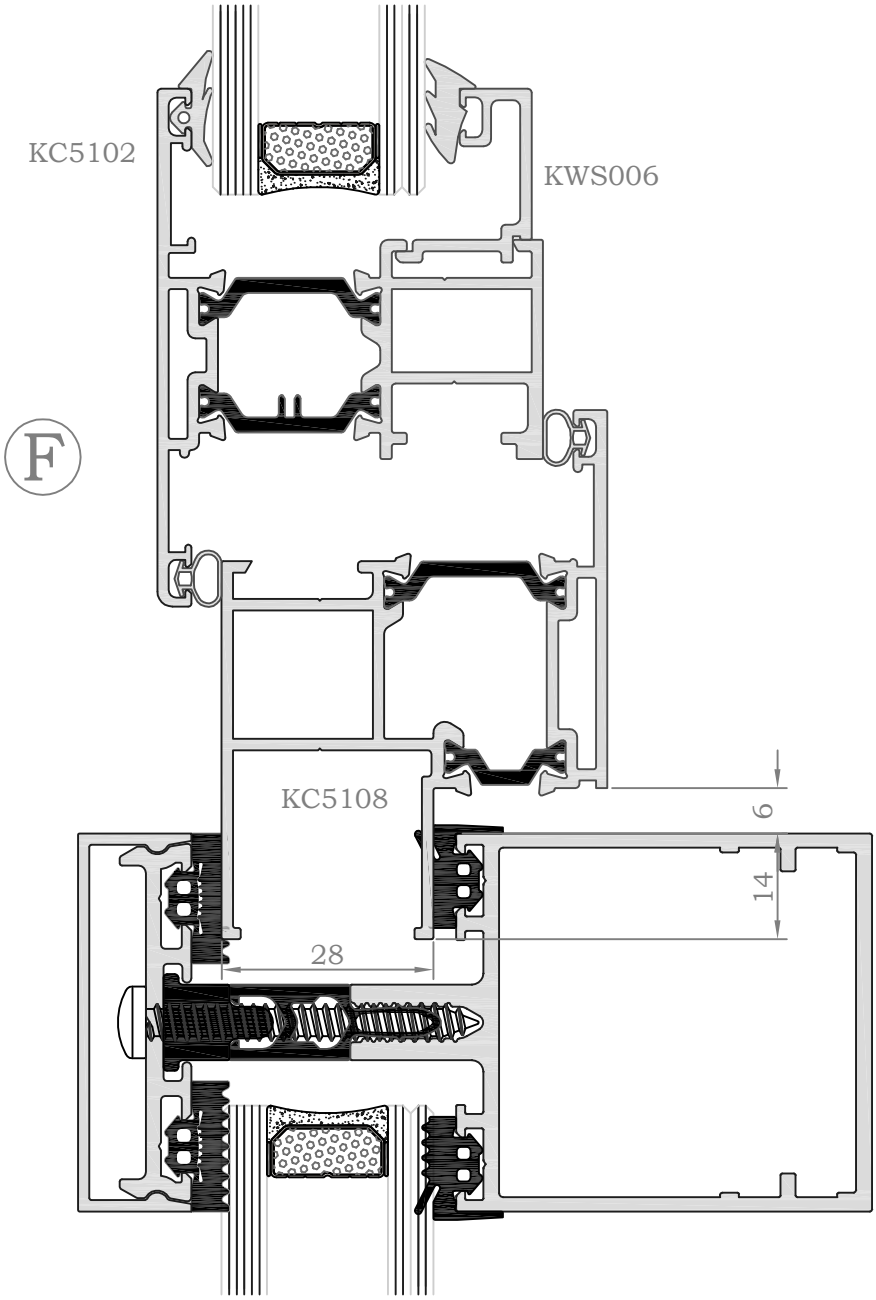

ECW50.1.303 160mm Mullion Over Transom

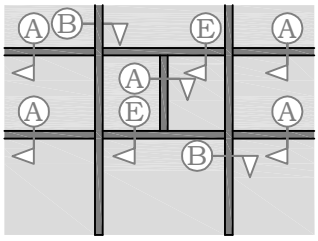

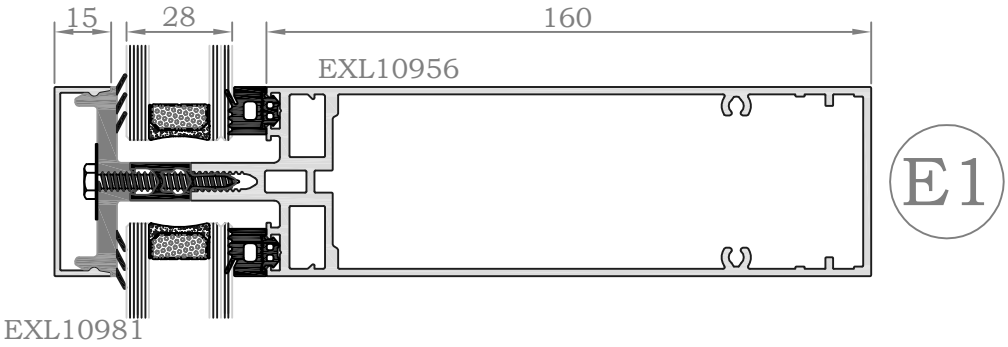

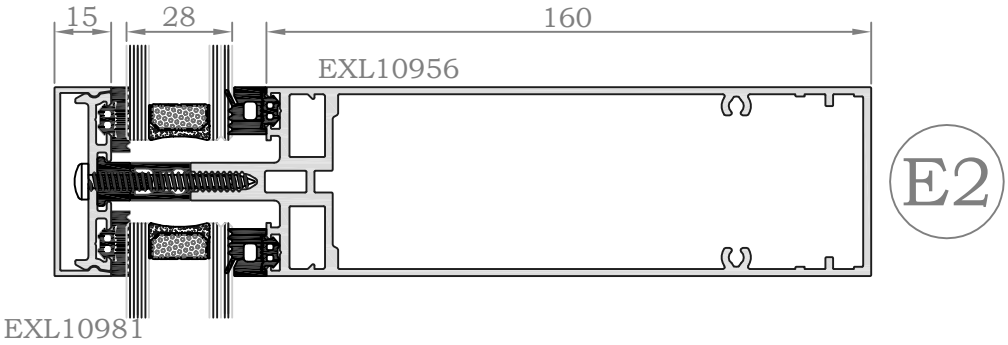

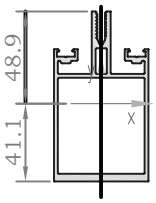

EXL10902	
Ix cm4 ▼	68.27
Iy cm4 ►	24.08
Kg/m	2.214
Tot Ext Per	436mm
70mm Mullion	

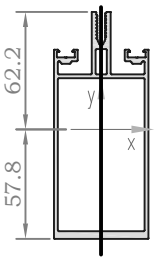

EXL10903	
Ix cm4 ▼	151.71
Iy cm4 ►	31.31
Kg/m	2.554
Tot Ext Per	500mm
100mm Mullion	

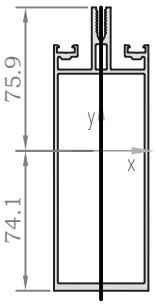

EXL10904	
Ix cm4 ▼	277.28
Iy cm4 ►	36.55
Kg/m	2.894
Tot Ext Per	570mm
130mm Mullion	

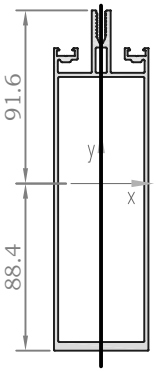

EXL10905	
Ix cm4 ▼	473.99
Iy cm4 ►	47.72
Kg/m	3.384
Tot Ext Per	620mm
160mm Mullion	

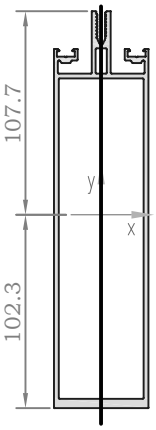

EXL10906	
Ix cm4 ▼	767.70
Iy cm4 ►	61.12
Kg/m	4.113
Tot Ext Per	680mm
190mm Mullion	

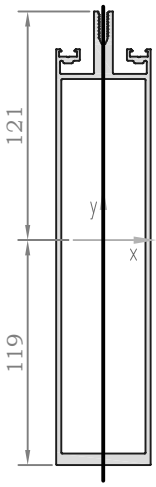

EXL10907	
Ix cm4 ▼	1276.41
Iy cm4 ►	76.53
Kg/m	5.214
Tot Ext Per	740mm
220mm Mullion	

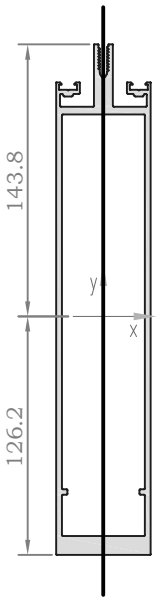

EXL10908	
Ix cm4 ▼	2120.85
Iy cm4 ►	94.81
Kg/m	6.580
Tot Ext Per	800mm
250mm Mullion	

Mullion Reinforcing Spigot ECW50.2.102

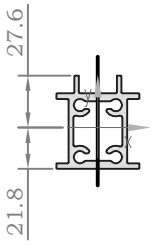

EXL10931	
Ix cm4	15.68
Iy cm4	9.49
Kg/m	1.709
Tot Ext Per	228mm
Reinforcing	

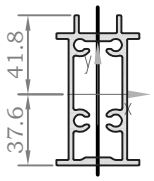

EXL10932	
Ix cm4	56.31
Iy cm4	12.93
Kg/m	2.236
Tot Ext Per	288mm
Reinforcing	

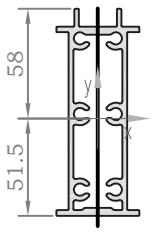

EXL10933	
Ix cm4	142.22
Iy cm4	24.52
Kg/m	2.929
Tot Ext Per	348mm
Reinforcing	

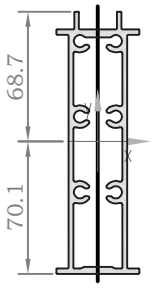

EXL10934	
Ix cm4	239.98
Iy cm4	34.24
Kg/m	3.291
Tot Ext Per	406mm
Reinforcing	

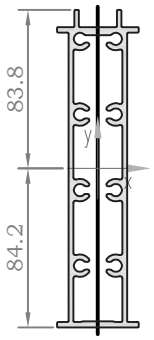

EXL10935	
Ix cm4	411.19
Iy cm4	23.55
Kg/m	3.931
Tot Ext Per	461mm
Reinforcing	

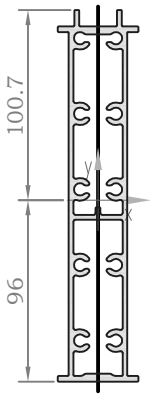

EXL10936	
Ix cm4	671.70
Iy cm4	27.66
Kg/m	4.830
Tot Ext Per	515mm
Reinforcing	

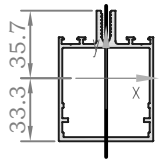

EXL10972	
Ix cm4 ▼	28.00
Iy cm4 ►	16.86
Kg/m	1.464
Tot Ext Per	315mm
55mm Transom	

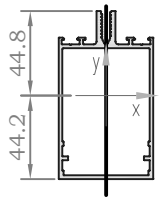

EXL10973	
Ix cm4 ▼	56.16
Iy cm4 ►	21.26
Kg/m	1.669
Tot Ext Per	355mm
75mm Transom	

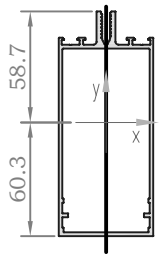

EXL10974	
Ix cm4 ▼	121.90
Iy cm4 ►	27.85
Kg/m	1.977
Tot Ext Per	415mm
105mm Transom	

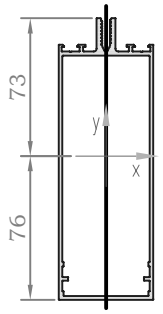

EXL10975	
Ix cm4 ▼	220.48
Iy cm4 ►	34.45
Kg/m	2.285
Tot Ext Per	475mm
135mm Transom	

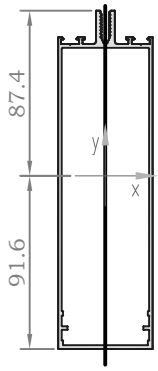

EXL10976	
Ix cm4 ▼	357.06
Iy cm4 ►	41.05
Kg/m	2.592
Tot Ext Per	535mm
165mm Transom	

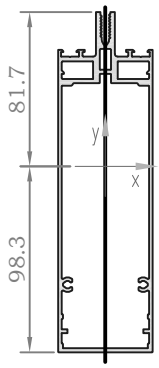

EXL10956	
Ix cm4 ▼	424.45
Iy cm4 ►	45.13
Kg/m	3.296
Tot Ext Per	541mm
160mm Header Bar	

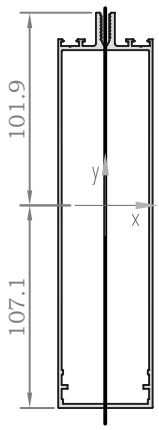

EXL10977	
Ix cm4 ▼	536.79
Iy cm4 ►	47.65
Kg/m	2.901
Tot Ext Per	595mm
195mm Transom	

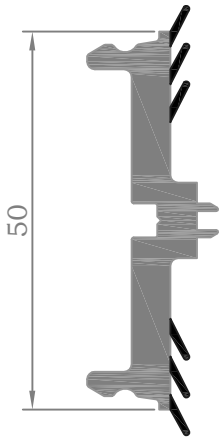

KPPP	
Kg/m	xx
Plastic Pressure Plate (Pre-Punched)	

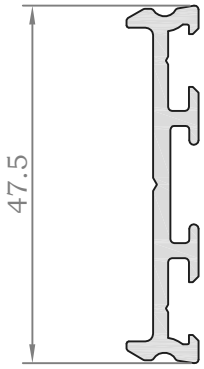

EXL10980	
Kg/m	0.431
Tot Ext Per	163mm
Pressure Plate	

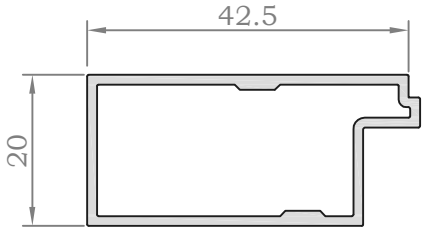

EXL10881	
Kg/m	0..451
Tot Ext Per	127mm
Pocket Closer Mull	

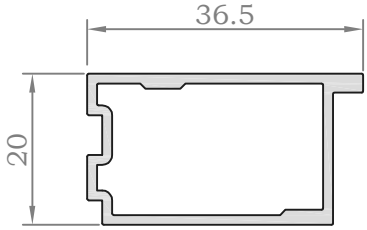

EXL10882	
Kg/m	0.410
Tot Ext Per	116mm
Pocket Closer Tran	

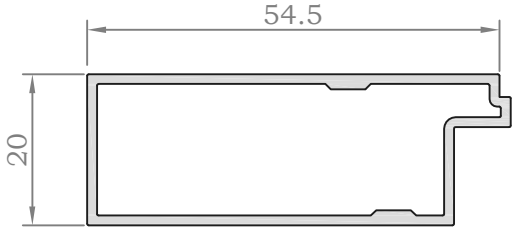

EXL10883	
Kg/m	0.535
Tot Ext Per	151mm
Pocket Closer Mull	

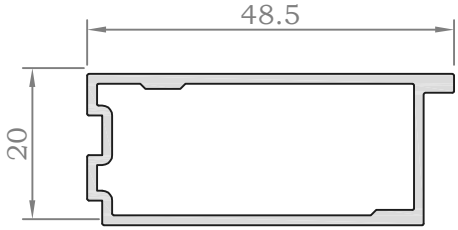

EXL10884	
Kg/m	0.495
Tot Ext Per	140mm
Pocket Closer Tran	

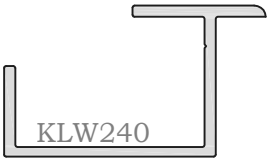

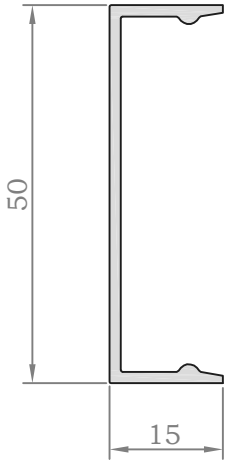

EXL10981	
Kg/m	0.32
Total Ext Per	157mm
15mm Cap	

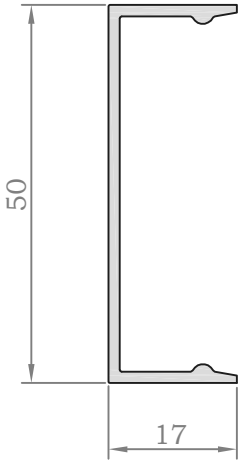

EXL10982	
Kg/m	0.34
Total Ext Per	165mm
17mm Cap	

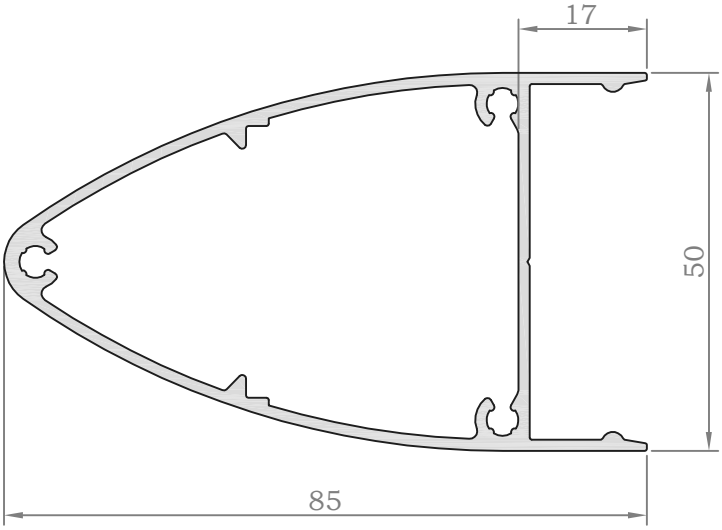

KLW233	
Kg/m	1.11
Total Ext Per	266mm
Aero Cap	

Add-On Reinforcing

ECW50.2.106

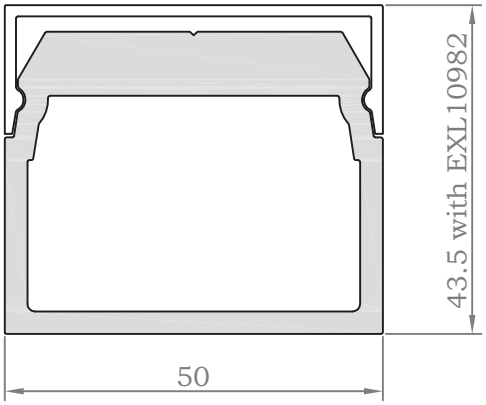

KLW250	
Kg/m	1.898
Total Ext Per	175mm
50 x 44 Reinforcer	

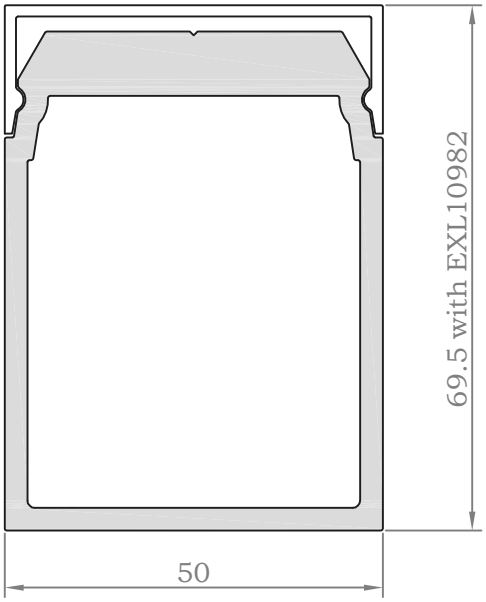

KLW251	
Kg/m	2.320
Total Ext Per	227mm
50 x 70 Reinforcer	

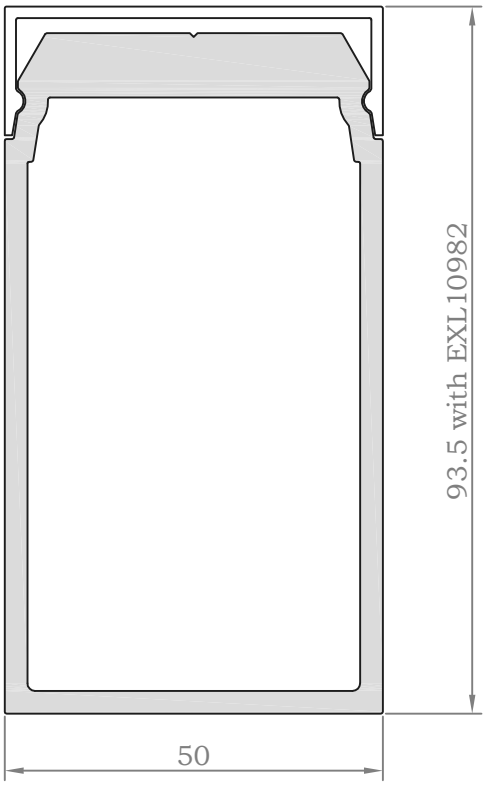

KLW252	
Kg/m	2.711
Total Ext Per	275mm
50 x 94 Reinforcer	

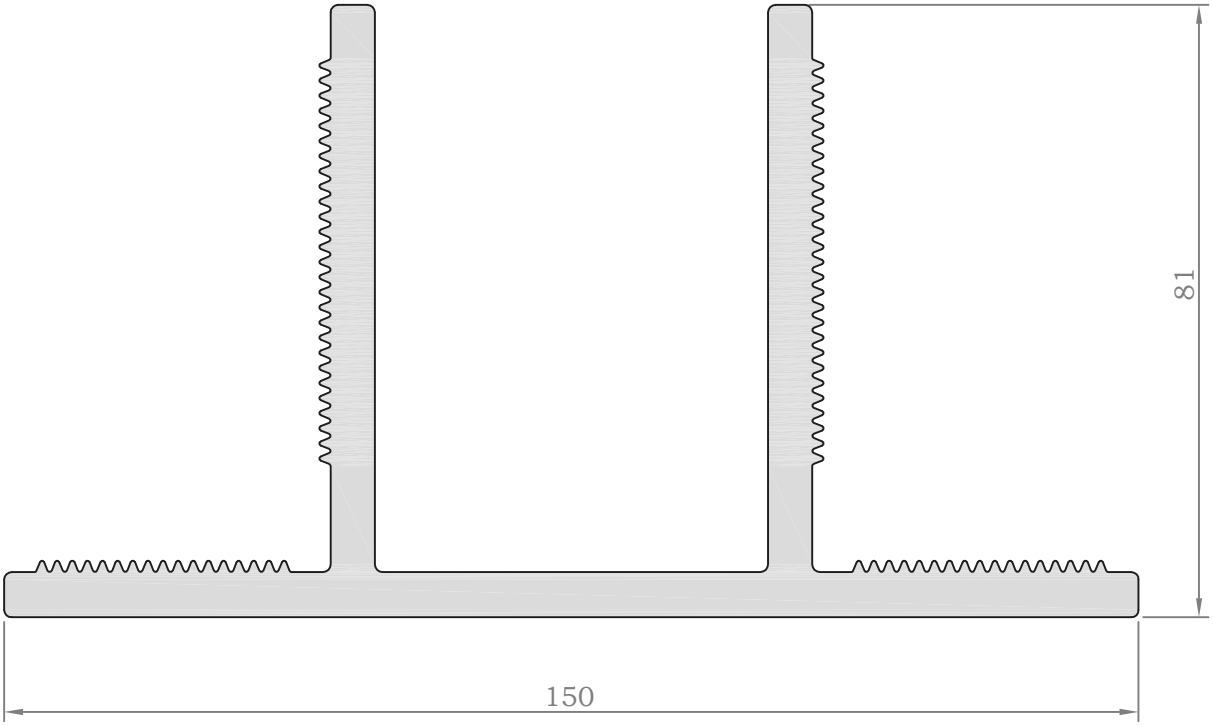

KLW241
Mullion Bracket

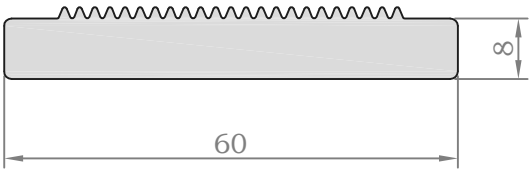

KLW243
60mm Plate

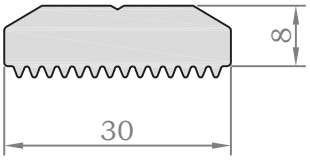

KLW242
Washer

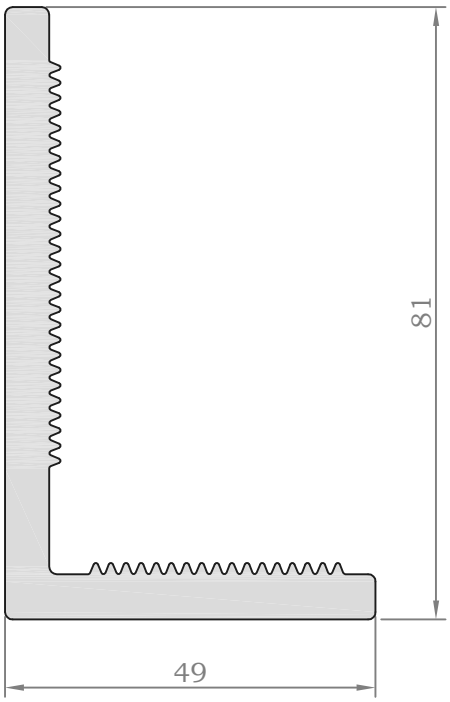

KLW244
Angle Bracket

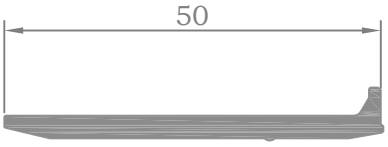

EXL10896

EXL10895

KLW245

ECW50.2.109 Reinforced Mullion

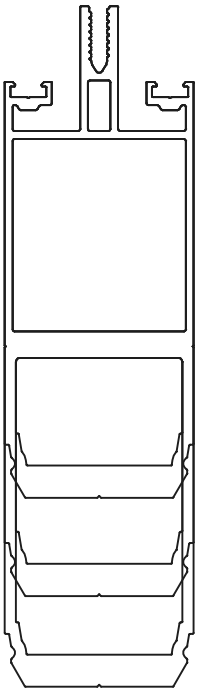

EXL10902+KLW250	
Ix cm4 ▼	241.6895
Iy cm4 ►	42.6970
EXL10902+KLW251	
Ix cm4 ▼	388.0795
Iy cm4 ►	51.3238
EXL10902+KLW252	
Ix cm4 ▼	572.4332
Iy cm4 ►	59.2870

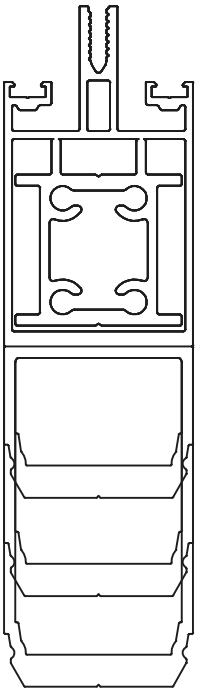

EXL10902+EXL10931	
Ix cm4 ▼	90.7446
Iy cm4 ►	33.5682
EXL10902+EXL10931 +KLW250	
Ix cm4 ▼	268.9207
Iy cm4 ►	52.1892
EXL10902+EXL10931 +KLW251	
Ix cm4 ▼	437.6154
Iy cm4 ►	60.8159
EXL10902+EXL10931 +KLW252	
Ix cm4 ▼	654.7073
Iy cm4 ►	68.7791

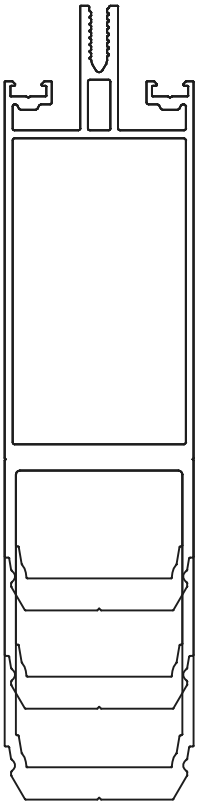

EXL10903+KLW250	
Ix cm4 ▼	433.8404
Iy cm4 ►	49.9290
EXL10903+KLW251	
Ix cm4 ▼	623.9456
Iy cm4 ►	58.5558
EXL10903+KLW252	
Ix cm4 ▼	852.5980
Iy cm4 ►	66.5190

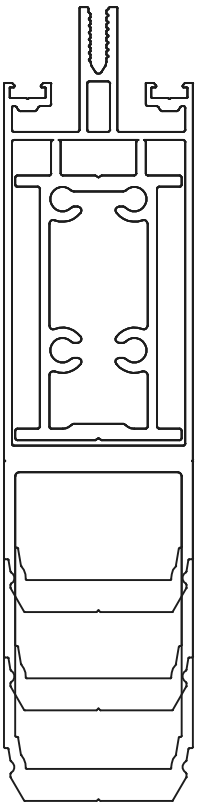

EXL10903+EXL10932	
Ix cm4 ▼	217.5590
Iy cm4 ►	44.2267
EXL10903+EXL10932 +KLW250	
Ix cm4 ▼	512.1521
Iy cm4 ►	62.8477
EXL10903+EXL10932 +KLW251	
Ix cm4 ▼	735.8617
Iy cm4 ►	71.4745
EXL10903+EXL10932 +KLW252	
Ix cm4 ▼	1011.3612
Iy cm4 ►	79.4376

Reinforced Mullion ECW50.2.110

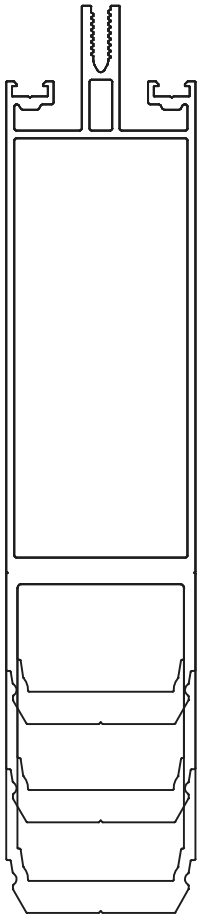

EXL10904+ECW250	
Ix cm4 ▼	697.4679
Iy cm4 ►	57.1664

EXL10904+ECW251	
Ix cm4 ▼	937.5411
Iy cm4 ►	65.7932

EXL10904+ECW252	
Ix cm4 ▼	1216.2758
Iy cm4 ►	73.7564

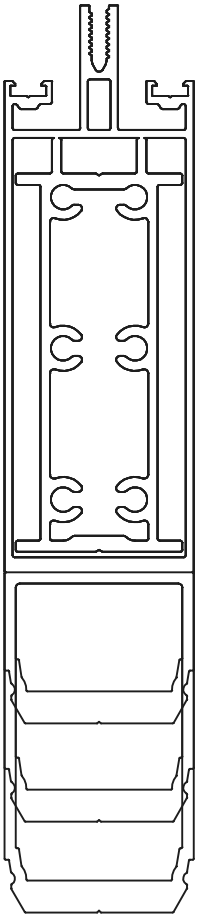

EXL10904+EXL10933	
Ix cm4 ▼	435.4898
Iy cm4 ►	55.4553

EXL10904+EXL10933 KLW250	
Ix cm4 ▼	870.5221
Iy cm4 ►	74.0763

EXL10904+EXL10933 KLW251	
Ix cm4 ▼	1155.2333
Iy cm4 ►	82.7031

EXL10904+EXL10933 KLW252	
Ix cm4 ▼	1495.3255
Iy cm4 ►	90.6663

ECW50.2.111 Reinforced Mullion

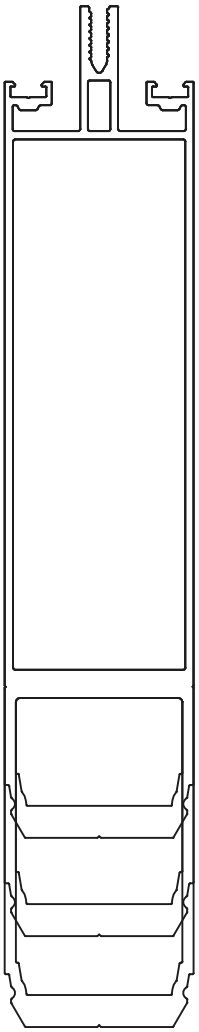

EXL10905+KLW250	
Ix cm4 ▼	1053.5714
Iy cm4 ►	66.3384
EXL10905+KLW251	
Ix cm4 ▼	1350.9970
Iy cm4 ►	74.9652
EXL10905+KLW252	
Ix cm4 ▼	1687.9987
Iy cm4 ►	82.9284

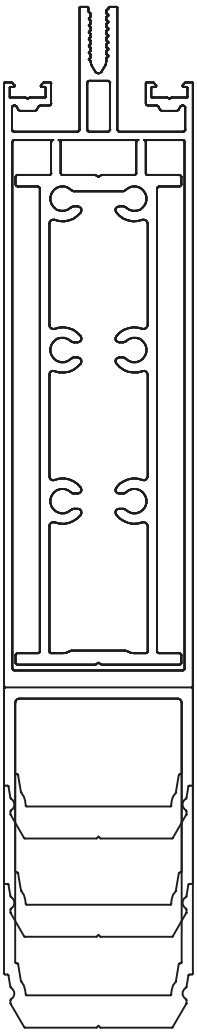

EXL10905+EXL10934	
Ix cm4 ▼	723.3133
Iy cm4 ►	67.5439
EXL10905+EXL10934 +KLW250	
Ix cm4 ▼	1351.7667
Iy cm4 ►	86.1648
EXL10905+EXL10934 +KLW251	
Ix cm4 ▼	1710.7716
Iy cm4 ►	94.79168
EXL10905+EXL10934 +KLW252	
Ix cm4 ▼	2127.3368
Iy cm4 ►	102.7548

Reinforced Mullion ECW50.2.112

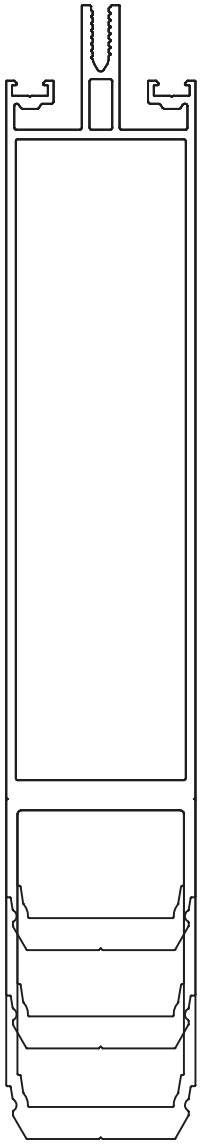

EXL10906+KLW250	
Ix cm4 ▼	1544.2984
Iy cm4 ►	79.7330
EXL10906+KLW251	
Ix cm4 ▼	1913.3419
Iy cm4 ►	88.3598
EXL10906+KLW252	
Ix cm4 ▼	2324.0050
Iy cm4 ►	96.3230

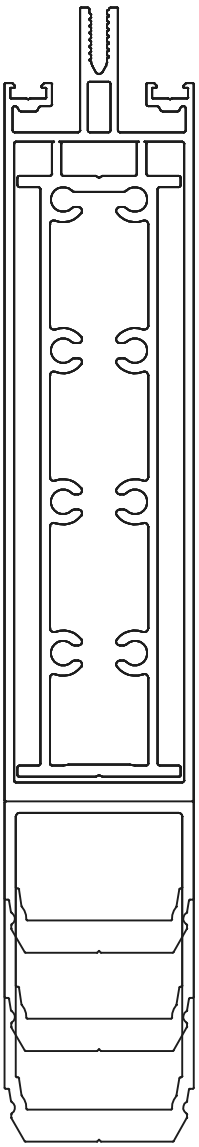

EXL10906+EXL10935	
Ix cm4 ▼	1188.9464
Iy cm4 ►	84.6642
EXL10906+EXL10935 +KLW250	
Ix cm4 ▼	2024.7724
Iy cm4 ►	103.2852
EXL10906+EXL10935 +KLW251	
Ix cm4 ▼	2463.5101
Iy cm4 ►	111.9120
EXL10906+EXL10935 +KLW252	
Ix cm4 ▼	2963.5375
Iy cm4 ►	119.8752

ECW50.2.113 Reinforced Mullion

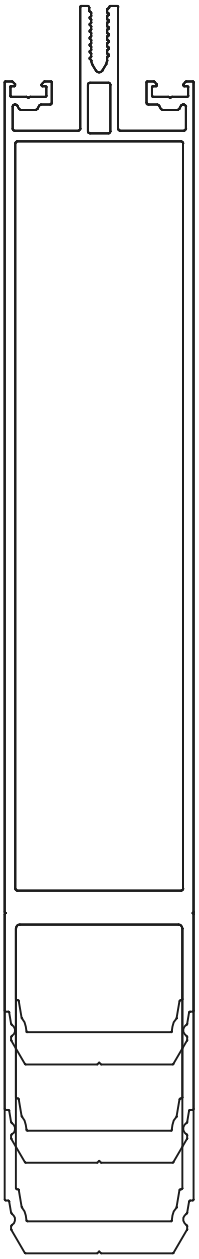

EXL10907+KLW250	
Ix cm4 ▼	2192.56684
Iy cm4 ►	95.1291

EXL10907+KLW251	
Ix cm4 ▼	2939.3048
Iy cm4 ►	103.7559

EXL10907+KLW252	
Ix cm4 ▼	3130.3530
Iy cm4 ►	111.7191

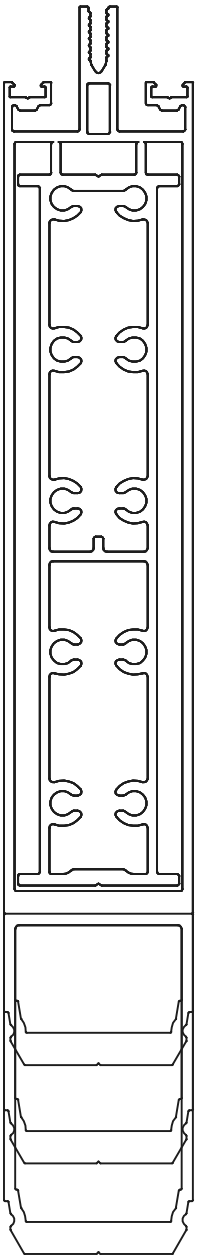

EXL10907+EXL10936	
Ix cm4 ▼	1885.5936
Iy cm4	104.1641

EXL10907+10936 +KLW250	
Ix cm4 ▼	2939.0440
Iy cm4 ►	122.7850

EXL10907+10936 +KLW251	
Ix cm4 ▼	3460.8565
Iy cm4 ►	131.4118

EXL10907+10936 +KLW252	
Ix cm4 ▼	4048.4314
Iy cm4 ►	139.3750

Reinforced Mullion ECW50.2.114

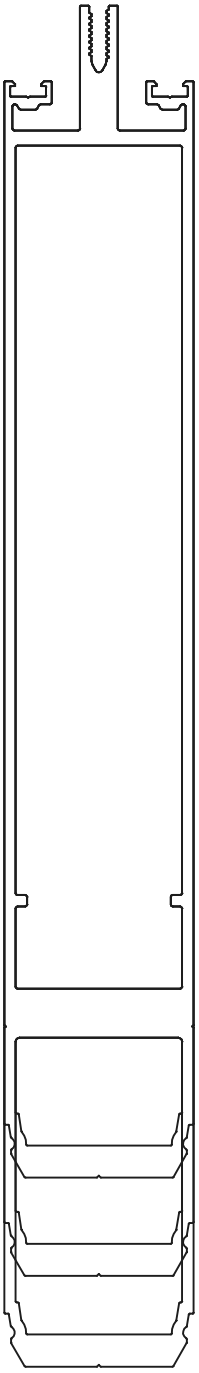

EXL10908+KLW250	
Ix cm4	3357.4262
Iy cm4	113.4359

EXL10908+KLW251	
Ix cm4	3900.4369
Iy cm4	122.0627

EXL10908+KLW252	
Ix cm4	4493.7877
Iy cm4	130.0259

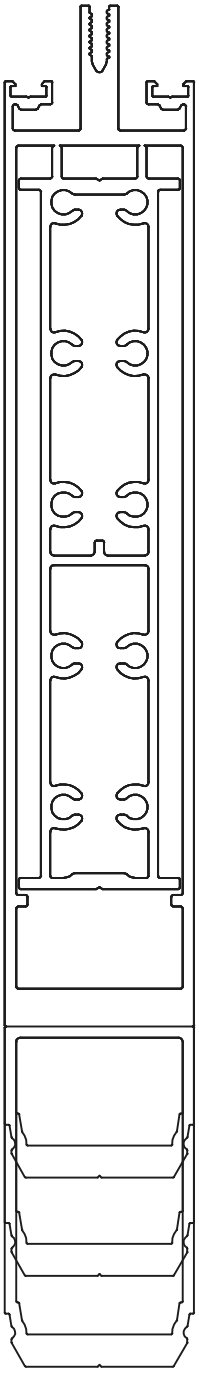

EXL10908+EXL10936	
Ix cm4	2796.4373
Iy cm4	122.4709

EXL10908+10936 +KLW250	
Ix cm4	4207.6720
Iy cm4	141.0918

EXL10908+10936 +KLW251	
Ix cm4	4851.3617
Iy cm4	149.7186

EXL10908+10936 +KLW252	
Ix cm4	5562.9609
Iy cm4	157.6818

MULLION

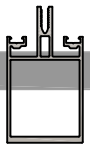

Deflection

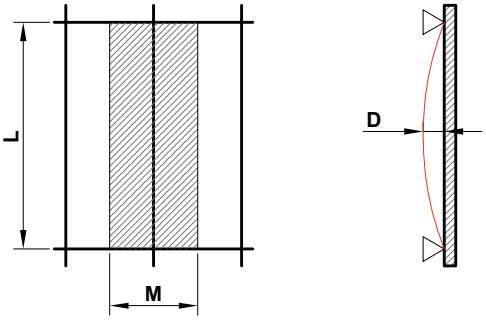

L	Distance between anchorage points
M	Moduel
D	L/200 or 15 mm

800 Pa D max L/200 or 15 mm

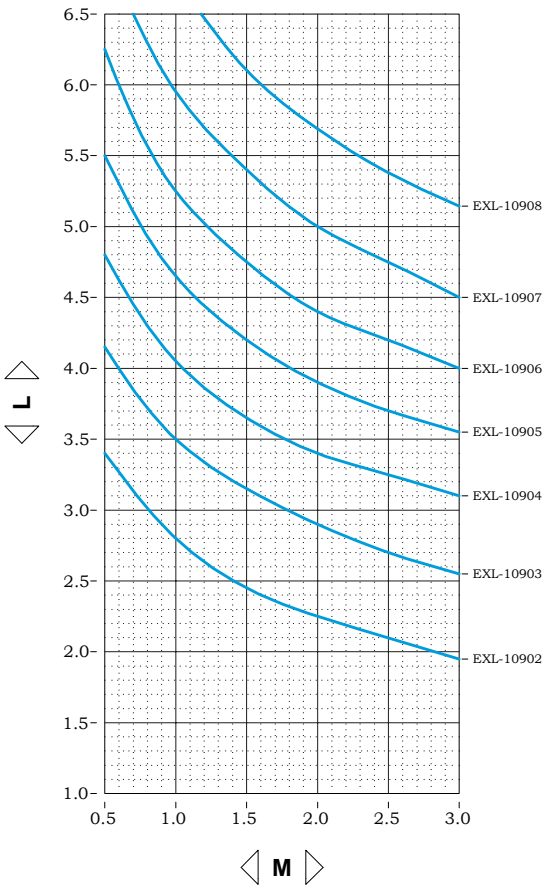

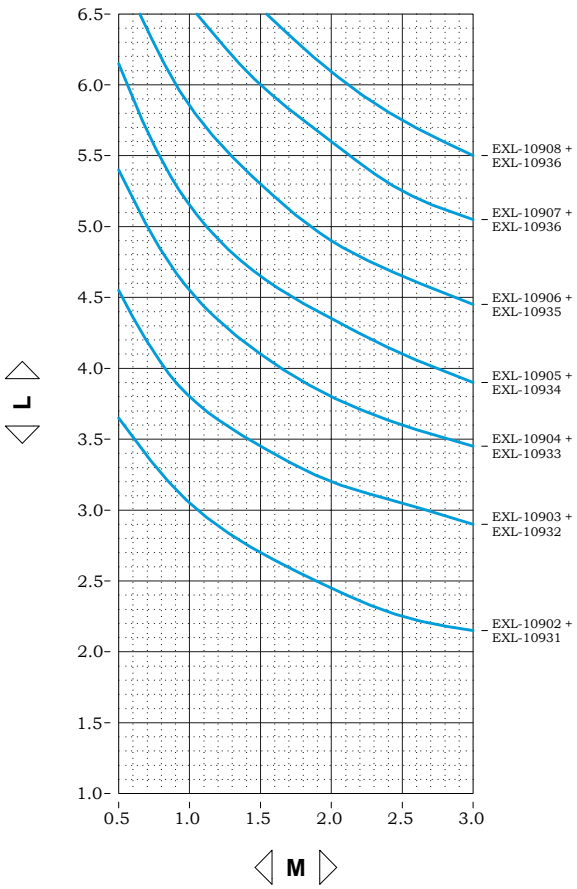

1200 Pa **D** max L/200 or 15 mm

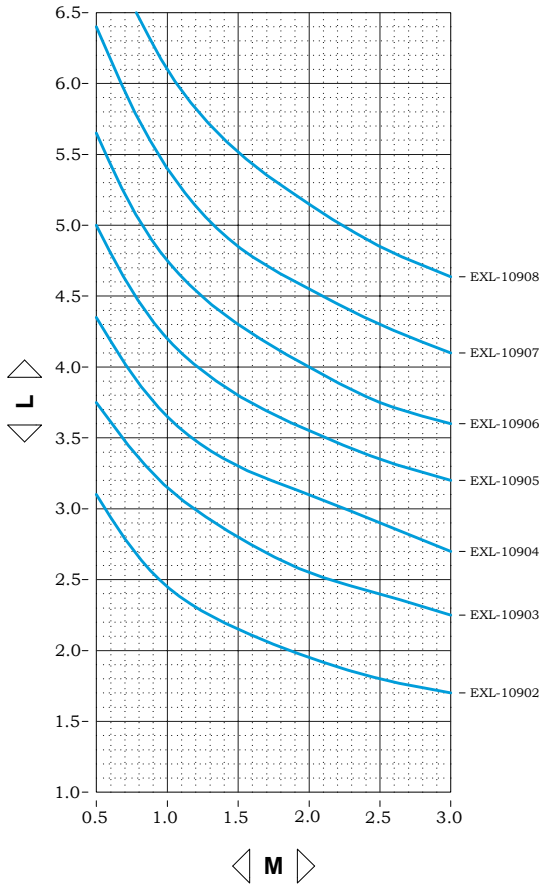

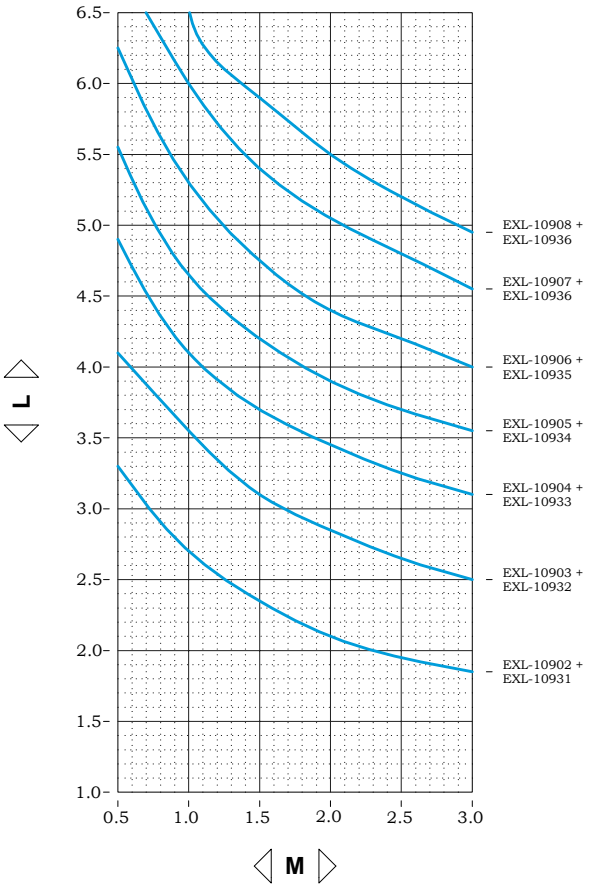

1600 Pa **D** max L/200 or 15 mm

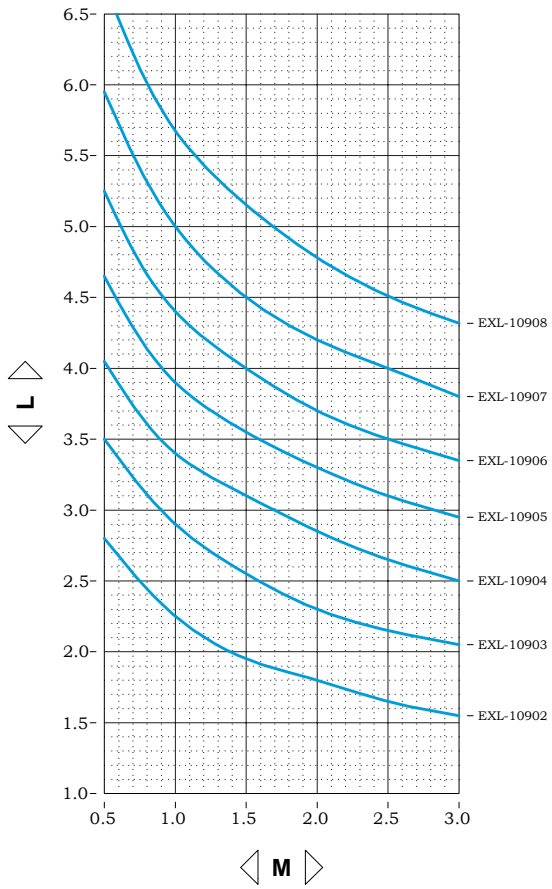

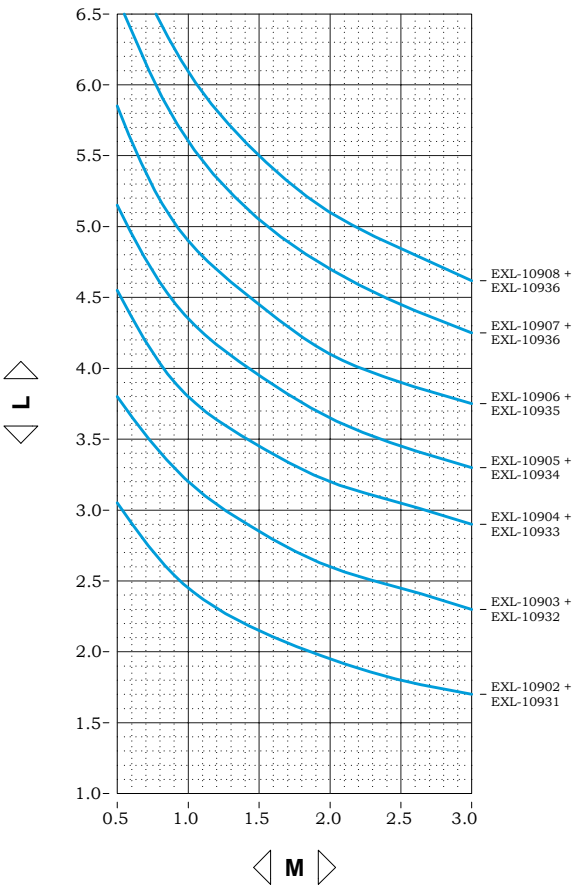

2000 Pa **D** max L/200 or 15 mm

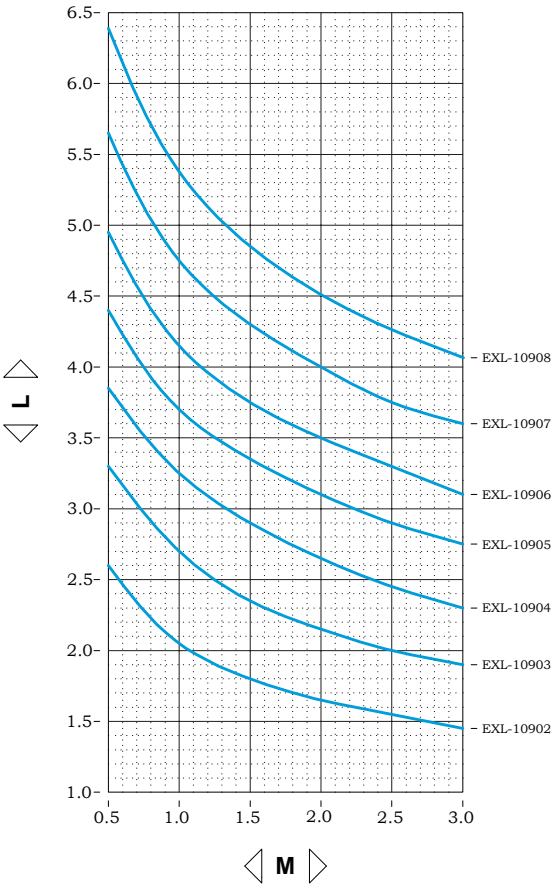

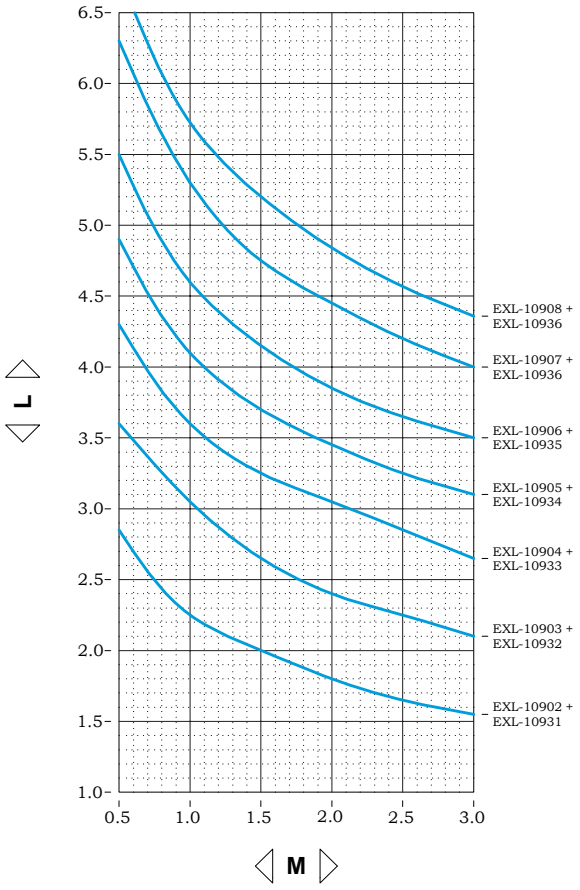

2400 Pa **D** max L/200 or 15 mm

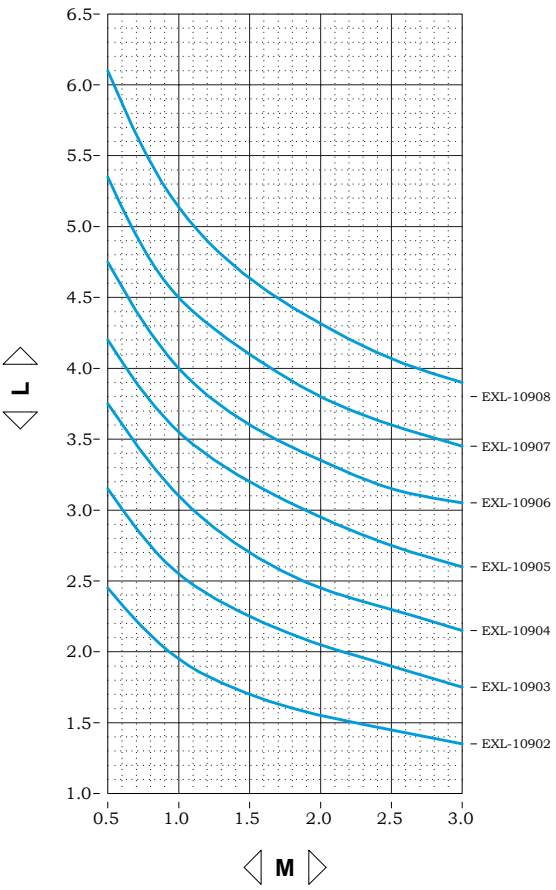

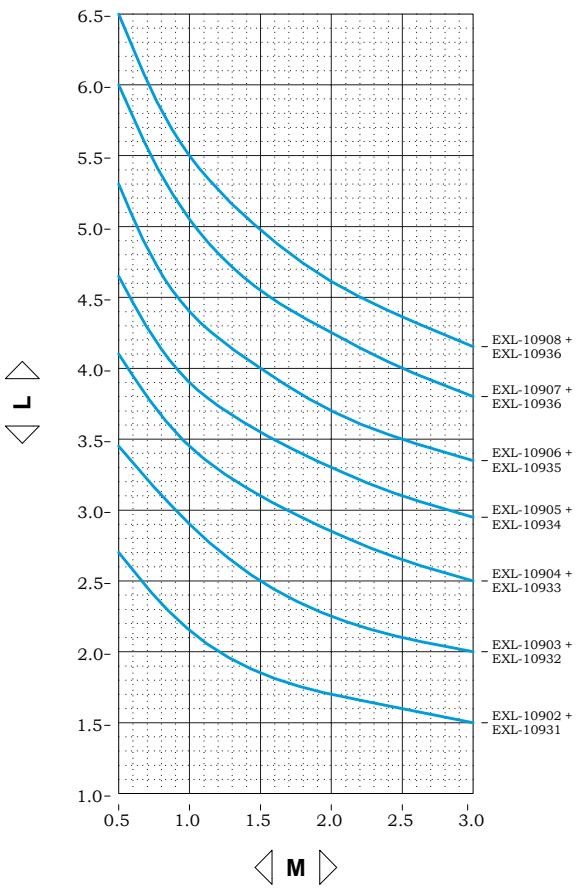

TRANSOM

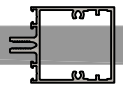

Deflection

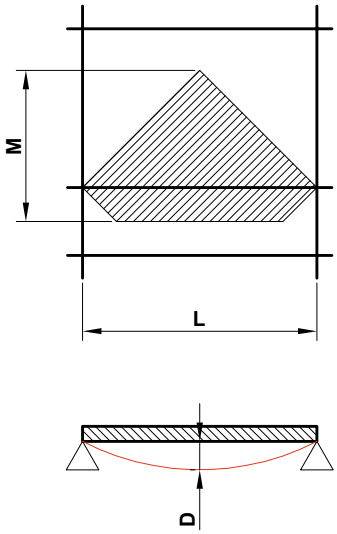

L	Distance between anchorage points
M	Moduel
D	L/200 or 15 mm

800 Pa **D** max L/200 or 15 mm

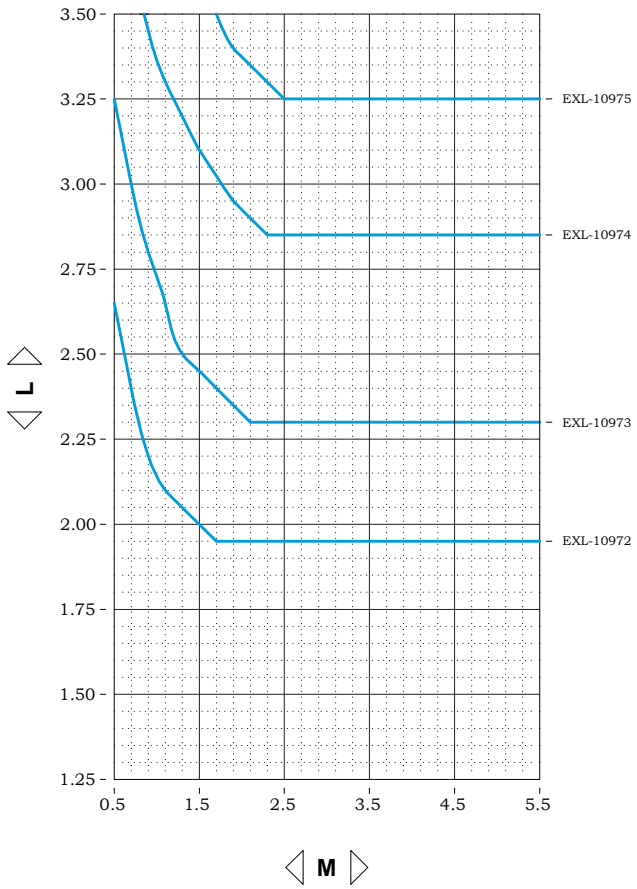

1200 Pa **D** max L/200 or 15 mm

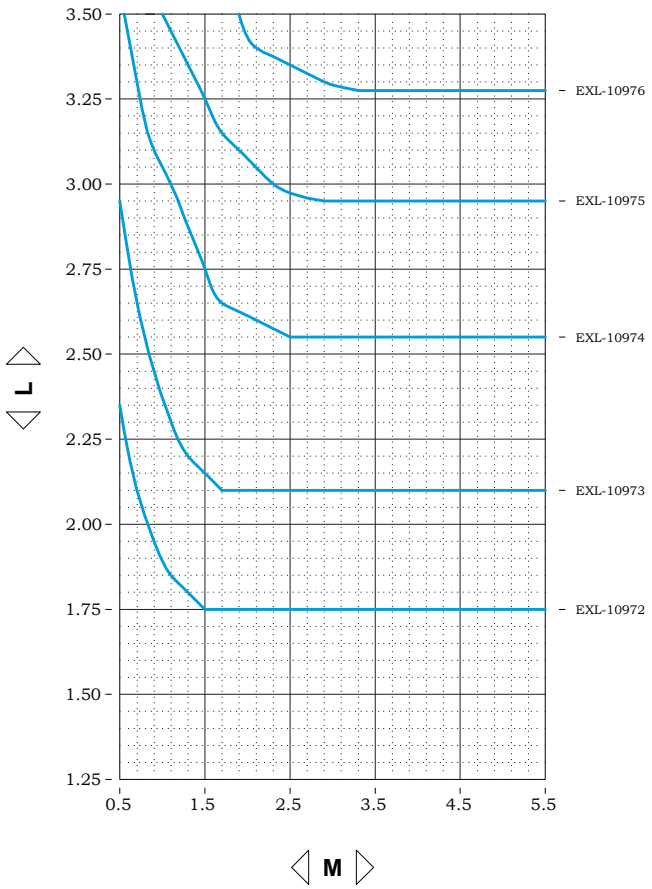

1600 Pa **D** max L/200 or 15 mm

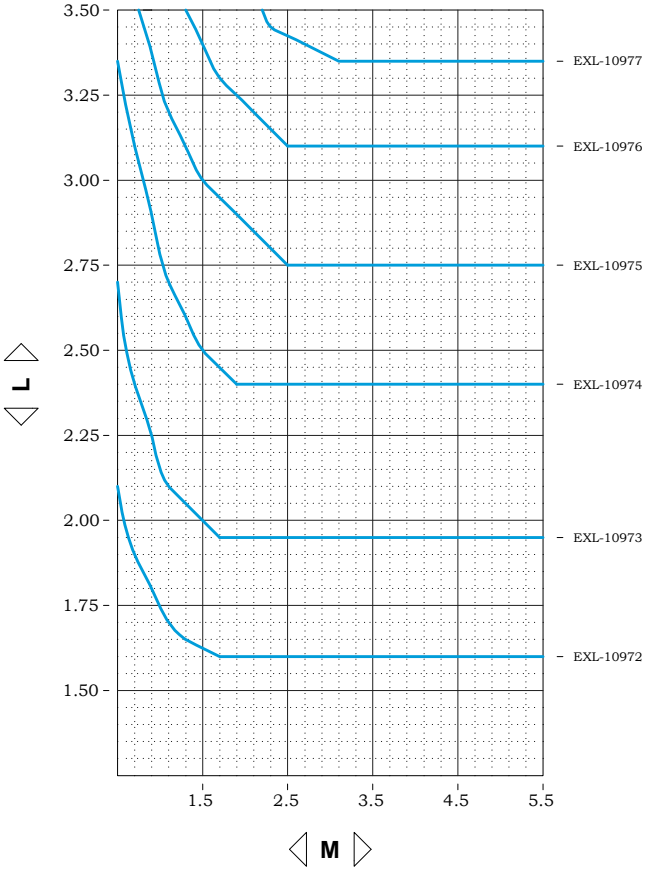

2000 Pa **D** max L/200 or 15 mm

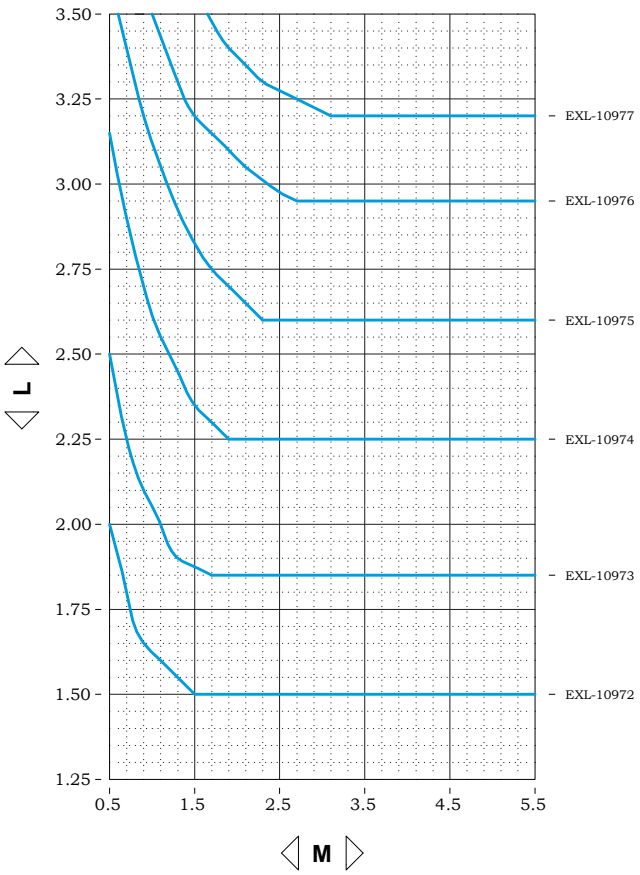

2400 Pa **D** max L/200 or 15 mm

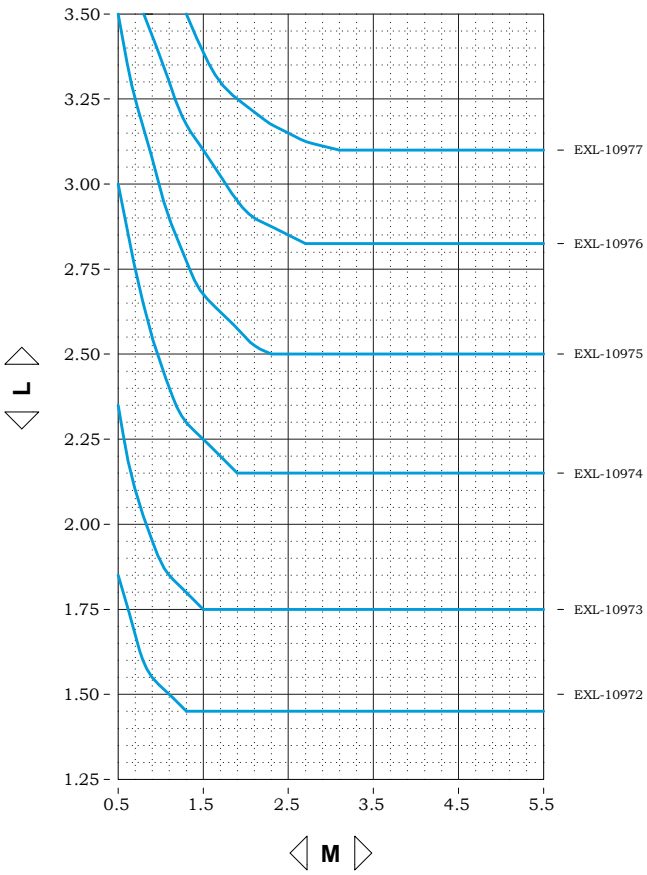

TRANSOM

Maximum weight 130 kg

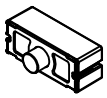

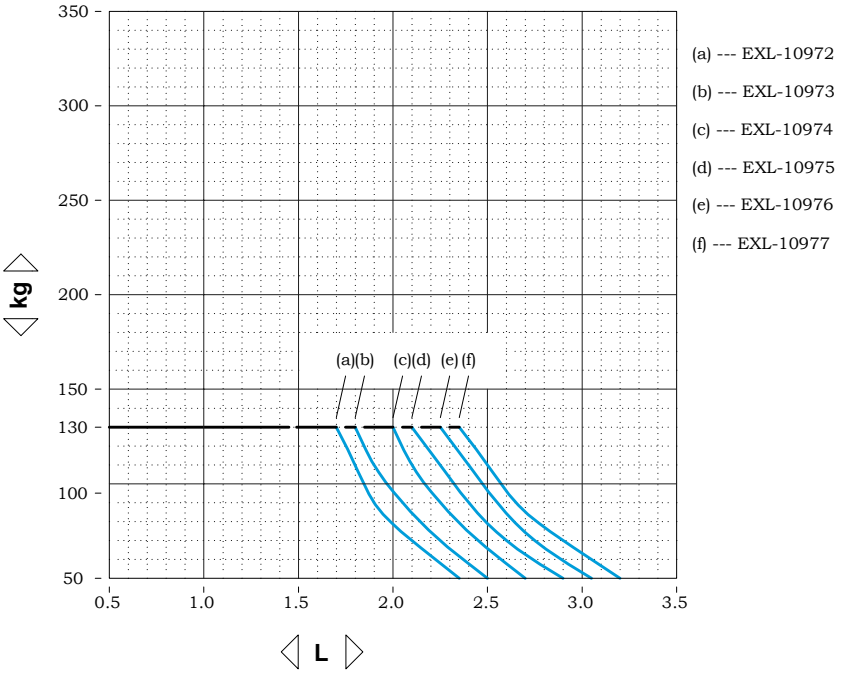

Deflection

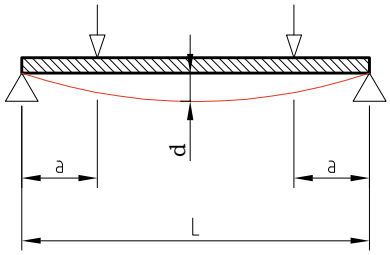

L	Long. transom
a	L/10
d	L/500 or 3 mm

1. The maximum load by dead weight depends on the type of union used in the crossbar.
2. The approx weight of the glass is stipulated according to [2.5 kg/m2/x thickness glass.
3. For weights greater than 350kg or cross-widths greater than 3.5m consult with technical department.

Maximum weight 350 kg

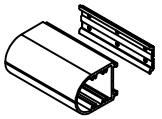

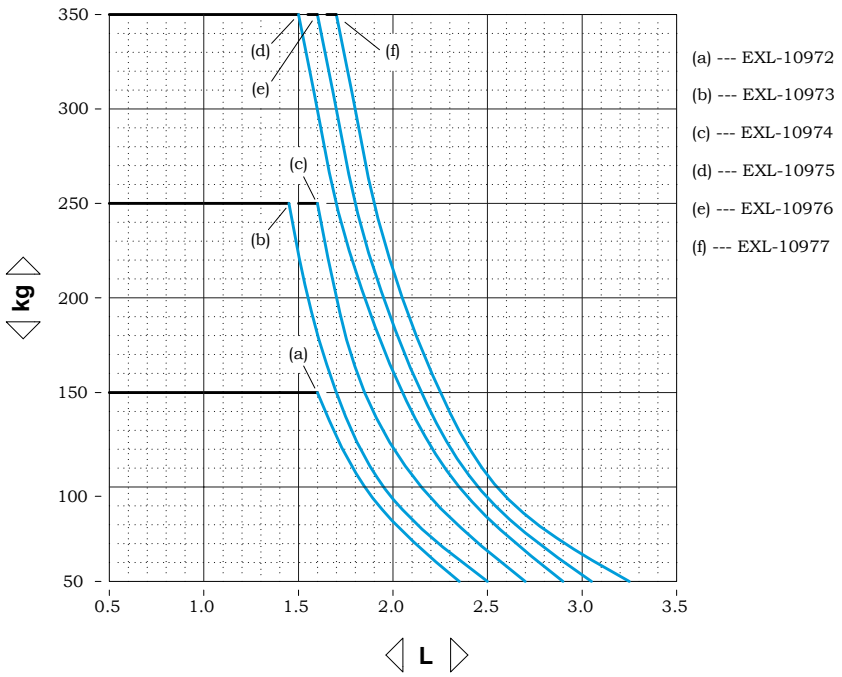

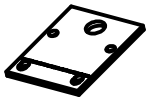

JD-10942
55mm Transom Gasket

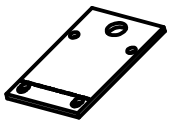

JD-10943
75mm Transom Gasket

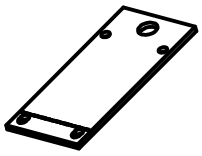

JD-10944
105mm Transom Gasket

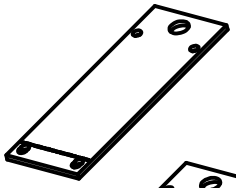

JD-10945
135mm Transom Gasket

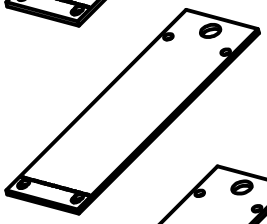

JD-10946
165mm Transom Gasket

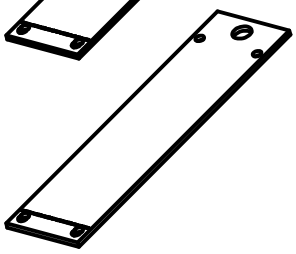

JD-10947
195mm Transom Gasket

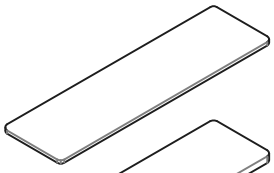

KGP281001
Glazing Pack 28x100x1 Green

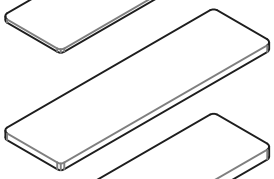

KGP281002
Glazing Pack 28x100x2 Black

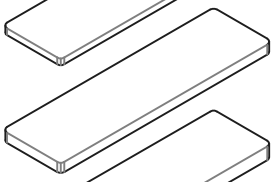

KGP281003
Glazing Pack 28x100x3 White

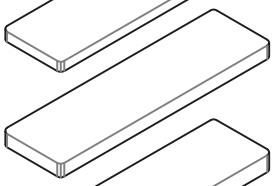

KGP281004
Glazing Pack 28x100x4 Grey

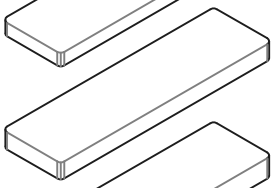

KGP281005
Glazing Pack 28x100x5 Blue

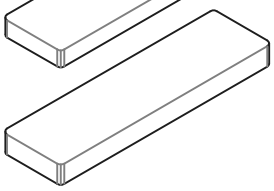

KGP281006
Glazing Pack 28x100x6 Red

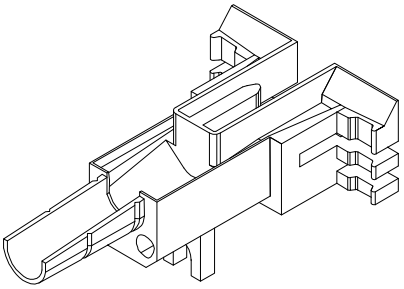

194036
Drainage Spout

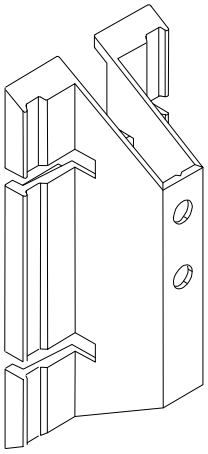

194037
Expansion Joint Seal

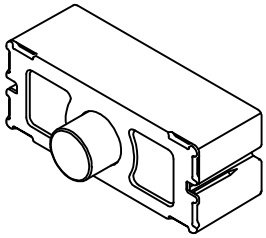

125005
Transom Connector

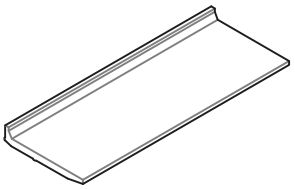

KLW245100
Glazing Support
28mm with KPPP

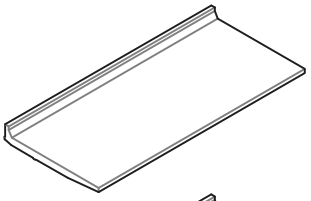

129129
Glazing Support
16 & 22mm T/B

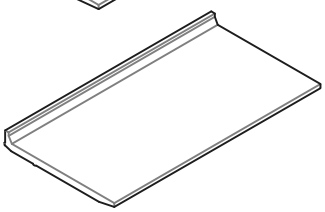

129130
Glazing Support
28 & 34mm T/B

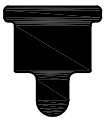

JE0001
Central Pressure Plate Gasket

JE0002
Pressure Plate Glazing Gasket

JT0003
3mm Transom Gasket

JT0005
5mm Transom Gasket

JT0007
7mm Transom Gasket

JT0009
9mm Transom Gasket

JM0009
9mm Mullion Gasket

JM0011
11mm Mullion Gasket

JM0013
13mm Mullion Gasket

JM0015
15mm Mullion Gasket

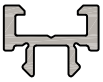

EXL10890
6mm Glass Adaptor

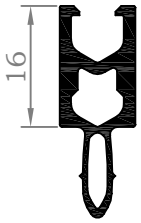

PO-0016/KTB28
16mm Thermal Break

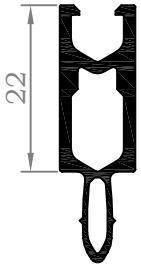

PO-0022
22mm Thermal Break

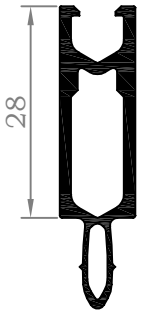

PO-0028
28mm Thermal Break

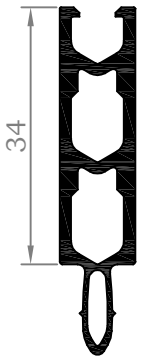

PO-0034
34mm Thermal Break

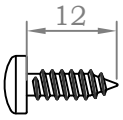

KFSP0812
No 8 x 12 Pan Hd S/ST Screw

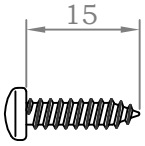

157001
3.9 x 15 Torx Screw

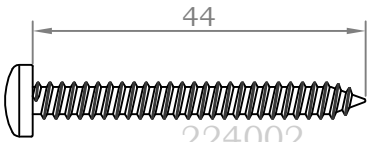

224002
4.8 x 44 Torx Screw

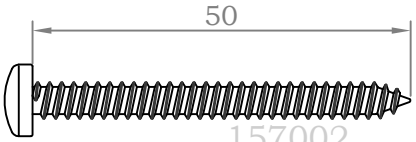

157002
4.8 x 50 Torx Screw

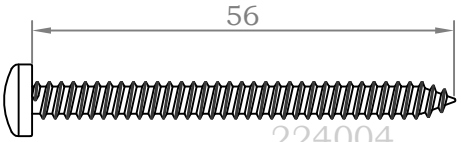

224004
4.8 x 56 Torx Screw

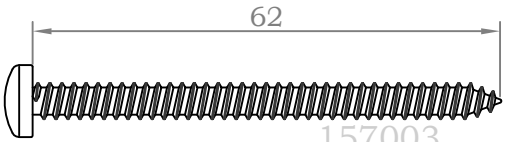

157003
4.8 x 62 Torx Screw

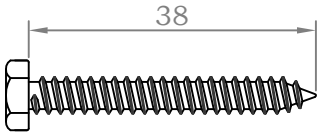

KFSH1038
No10 x 38 Hex Hd S/ST Screw

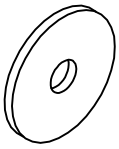

KFRW0520
M5 x 20 Flat Washer

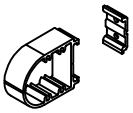

129369
Shear Block - 55mm Transom
(Comes in pairs)

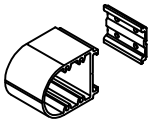

129370
Shear Block - 75mm Transom
(Comes in pairs)

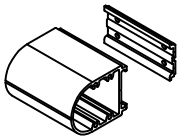

129371
Shear Block - 105mm Transom
(Comes in pairs)

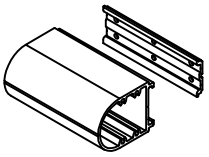

129372
Shear Block - 135mm Transom
(Comes in pairs)

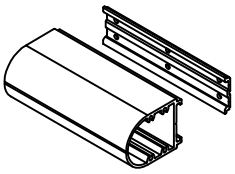

129373
Shear Block - 165mm Transom
(Comes in pairs)

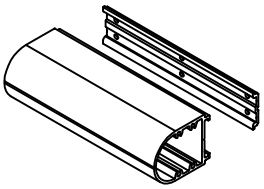

129374
Shear Block - 195mm Transom
(Comes in pairs)

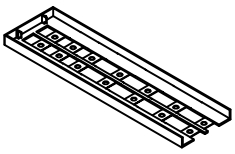

144010
Shear Block Pad

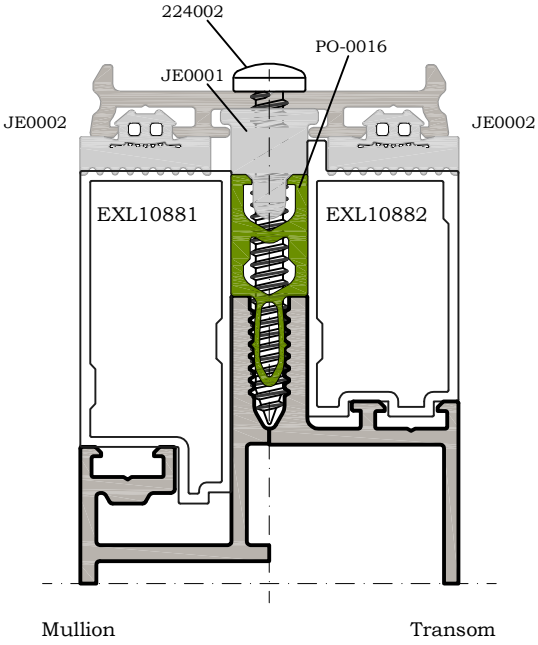
224002
PO-0016
JE0001
JE0002
JE0002
EXL10881
EXL10882
Mullion
Transom

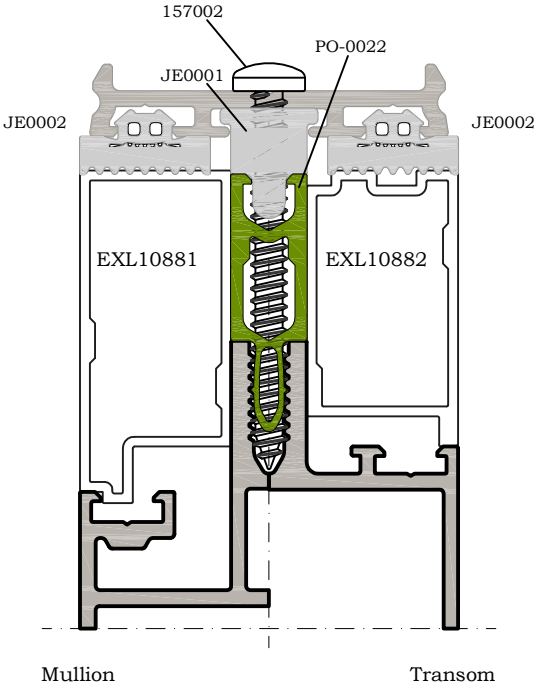
157002
PO-0022
JE0001
JE0002
JE0002
EXL10881
EXL10882
Mullion
Transom

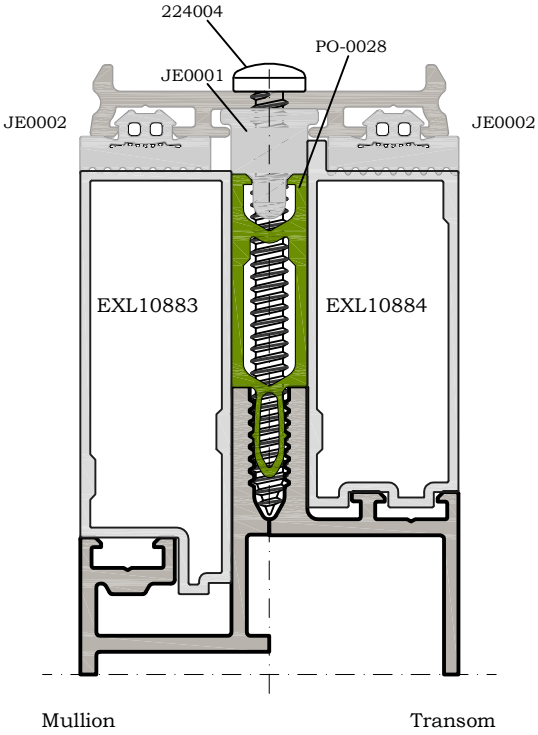
224004
PO-0028
JE0001
JE0002
JE0002
EXL10883
EXL10884
Mullion
Transom

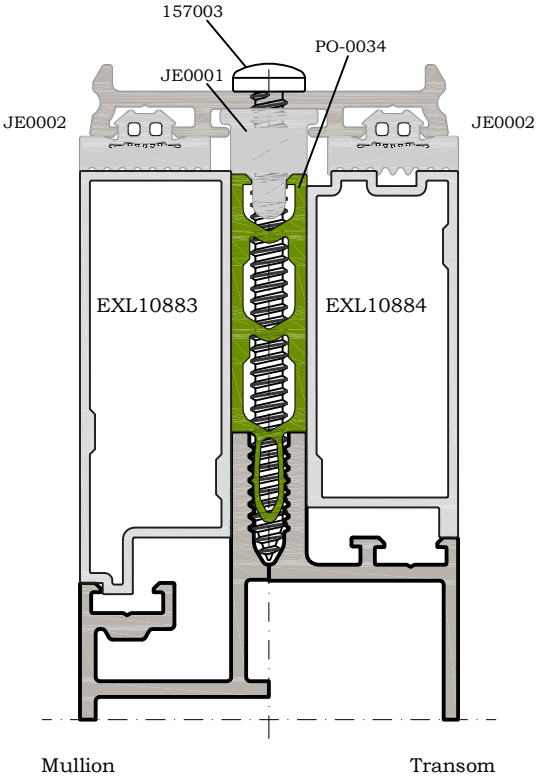
157003
PO-0034
JE0001
JE0002
JE0002
EXL10883
EXL10884
Mullion
Transom

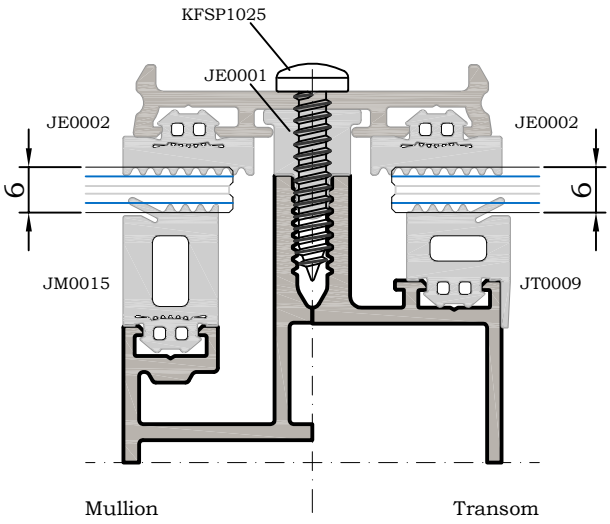
KFSP1025
JE0001
JE0002
JE0002
6
6
JM0015
JT0009
Mullion
Transom

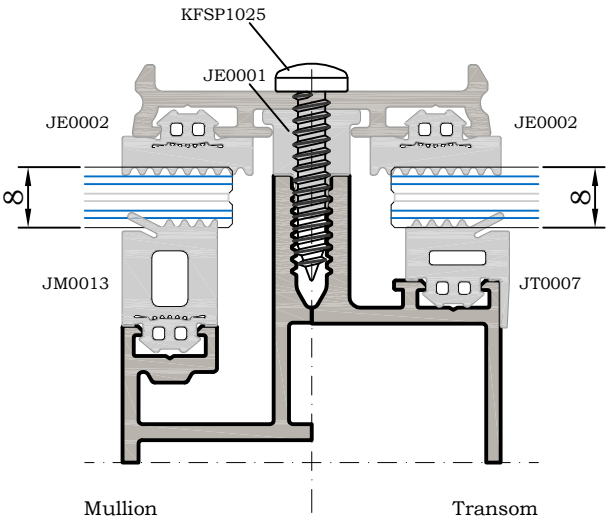
KFSP1025
JE0001
JE0002
JE0002
8
8
JM0013
JT0007
Mullion
Transom

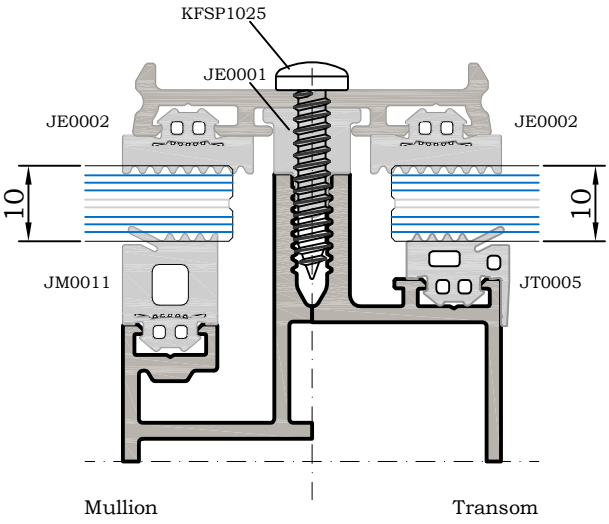
KFSP1025
JE0001
JE0002
JE0002
10
10
JM0011
JT0005
Mullion
Transom

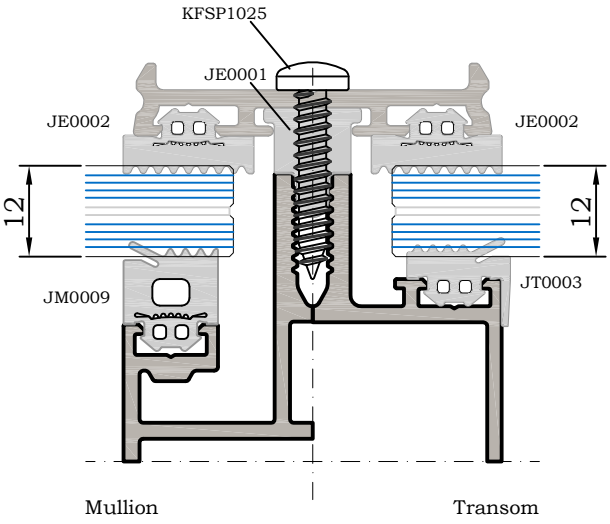
KFSP1025
JE0001
JE0002
JE0002
12
12
JM0009
JT0003
Mullion
Transom

ECW50.4.103 Glazing - 16mm Thermal Break

Pocket Closer
ECW10881 Mullion
ECW10882 Transom

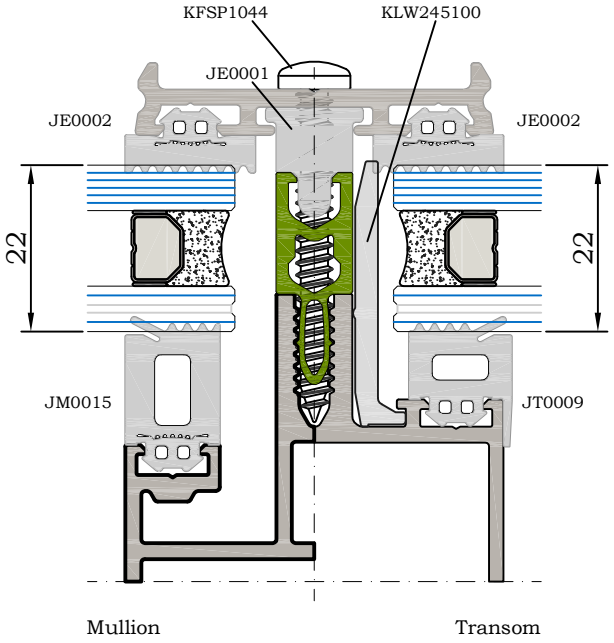

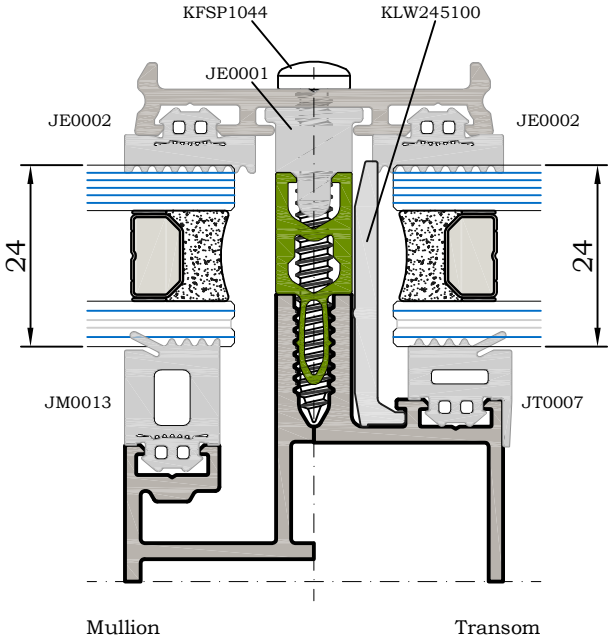

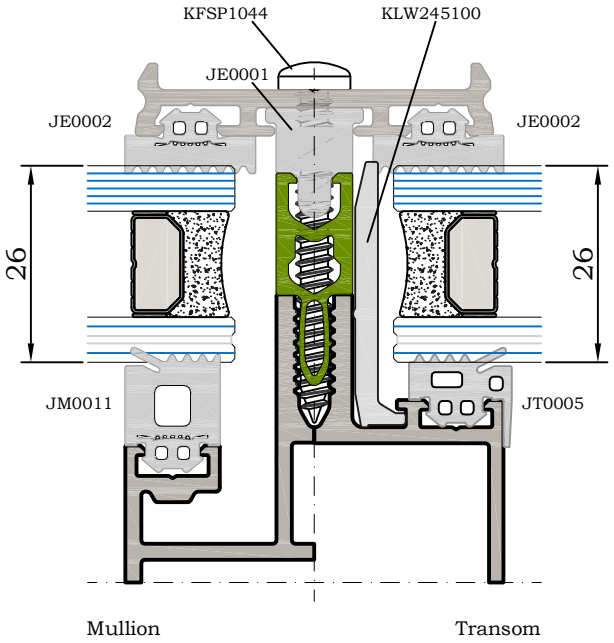

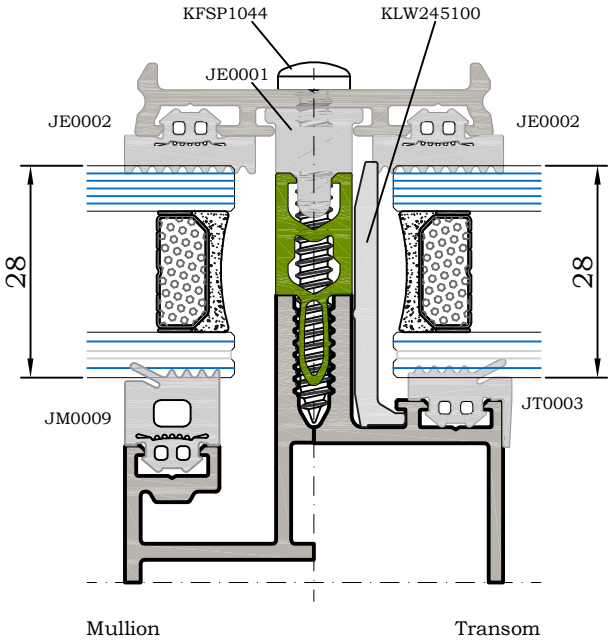

16mm *Thermal break - Improved thermal performance*
(values listed calculated using 22mm glass with insulated panel 0,035 W/mK)

Mullion	***Transom***
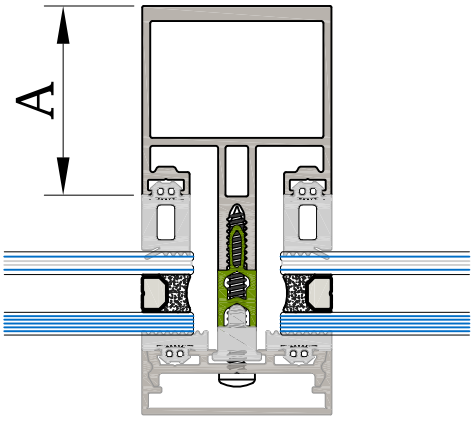	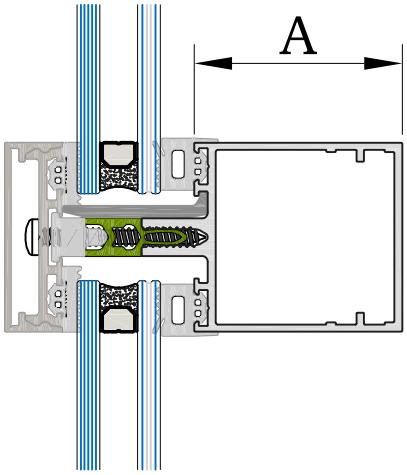

Dim "A" (mm)	Profile number	Uf (W/m²K)
70	EXL10902	2,812
100	EXL10903	2,883
160	EXL10905	2,936
190	EXL10906	2,973
220	EXL10907	3,029
250	EXL10908	3,023

Dim "A" (mm)	Profile number	Uf (W/m²K)
55	EXL10972	2,511
75	EXL10973	2,572
105	EXL10974	2,634
135	EXL10975	2,670
165	EXL10976	2,692
195	EXL10977	2,734

ECW50.4.105 Glazing - 22mm Thermal Break

Pocket Closer
ECW10881 Mullion
ECW10882 Transom

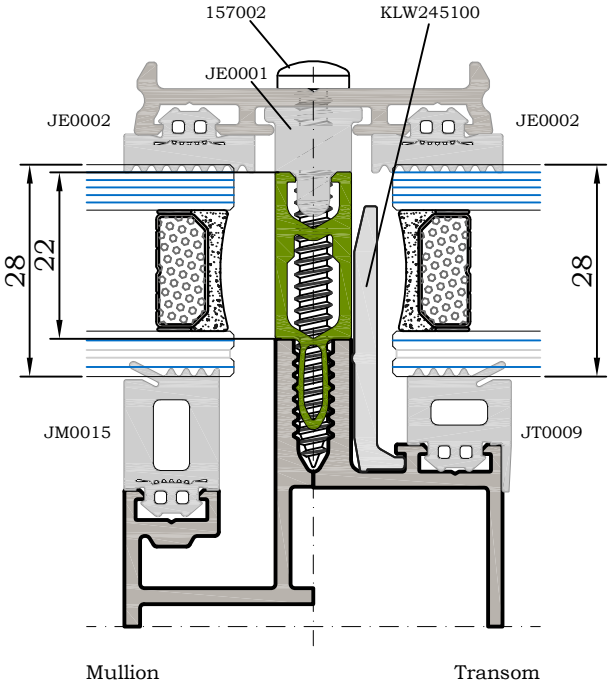

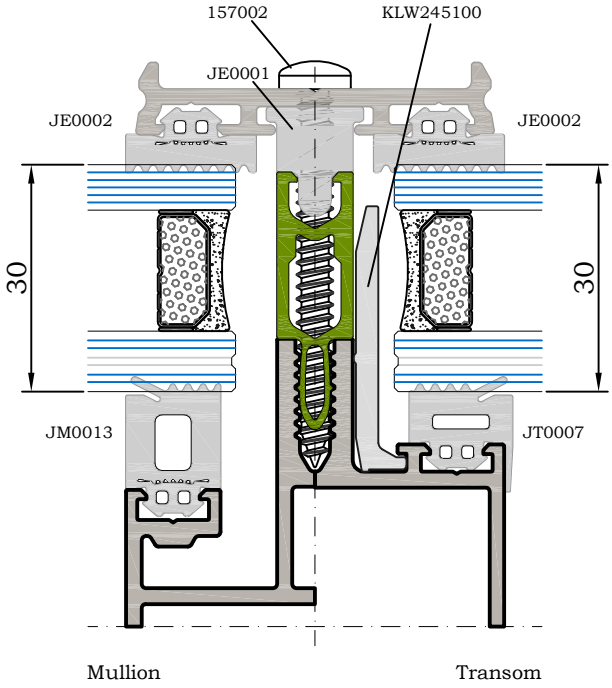

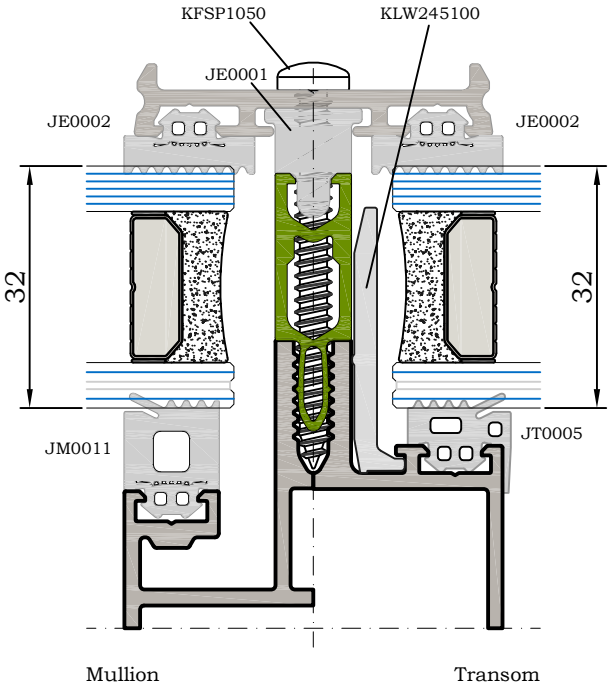

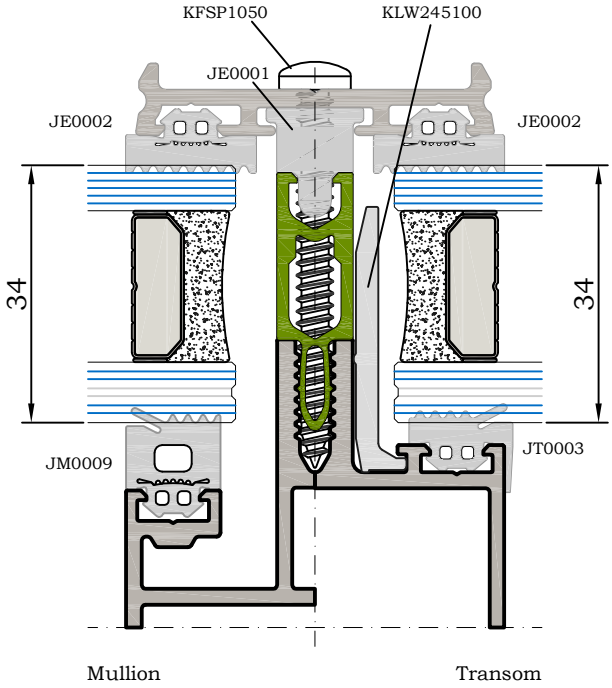

22mm *Thermal break - Improved thermal performance*
(values listed calculated using 28mm glass with insulated panel 0,035 W/mK)

Mullion	***Transom***
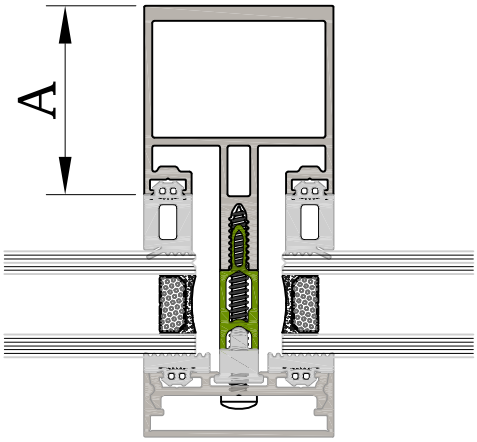	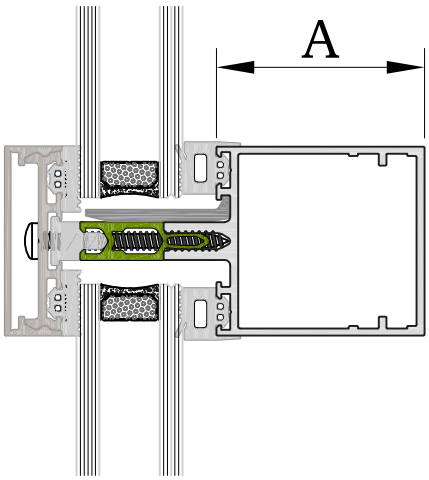

Dim "A" (mm)	Profile number	Uf (W/m²K)
70	EXL10902	2,135
100	EXL10903	2,183
130	EXL10904	2,215
160	EXL10905	2,239
190	EXL10906	2,250
220	EXL10907	2,276
250	EXL10908	2,282

Dim "A" (mm)	Profile number	Uf (W/m²K)
55	EXL10972	1,978
75	EXL10973	2,018
105	EXL10974	2,070
135	EXL10975	2,085
165	EXL10976	2,100
195	EXL10977	2,119

ECW50.4.107 Glazing - 28mm Thermal Break

Pocket Closer
ECW10883 Mullion
ECW10884 Transom

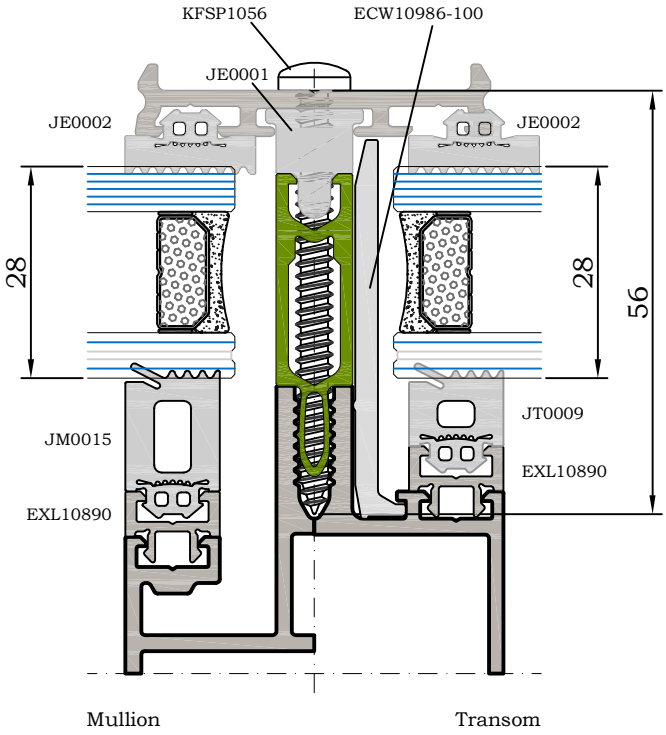

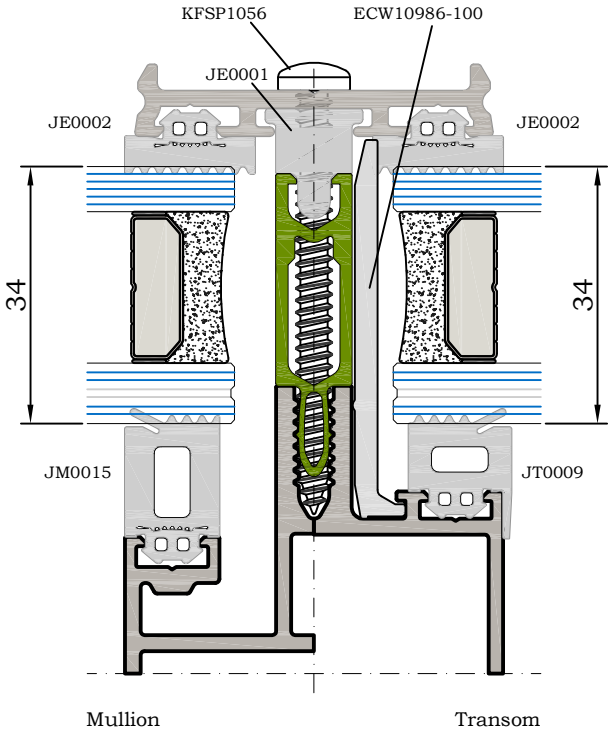

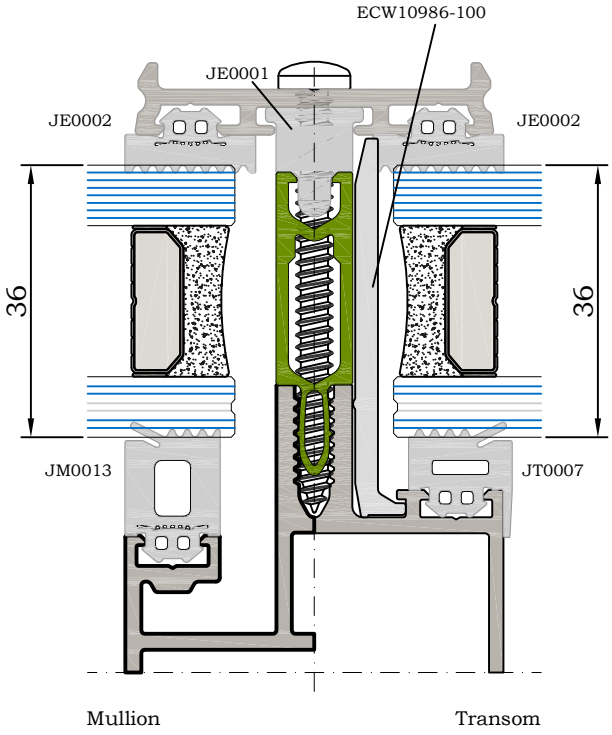

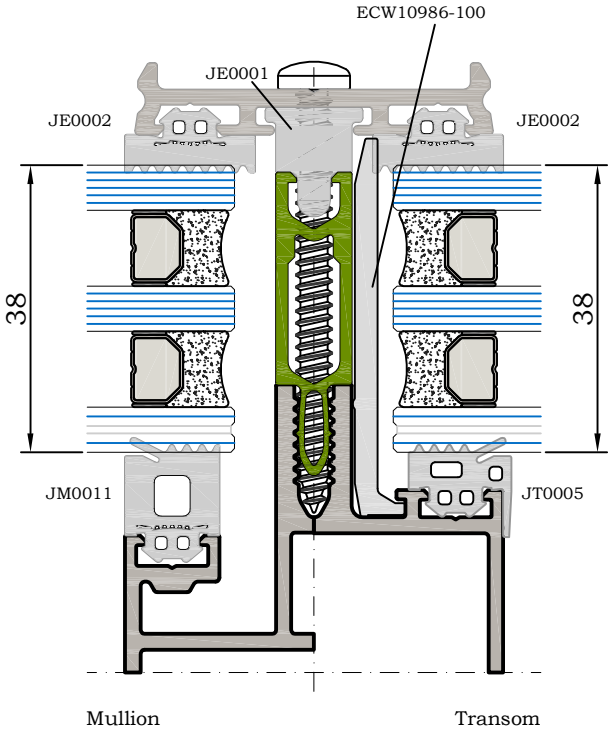

Frame U-Values

ECW50.4.108

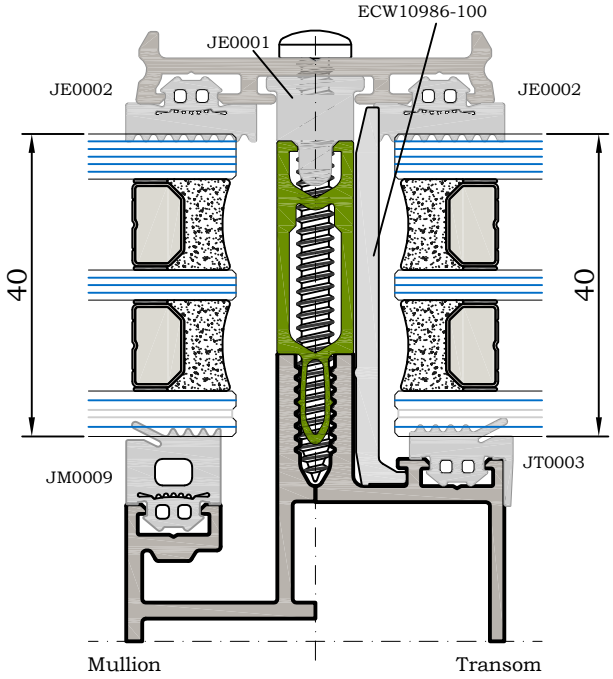

28mm *Thermal break - Improved thermal performance*
(values listed calculated using 34mm glass with insulated panel 0,035 W/mK)

Mullion	***Transom***
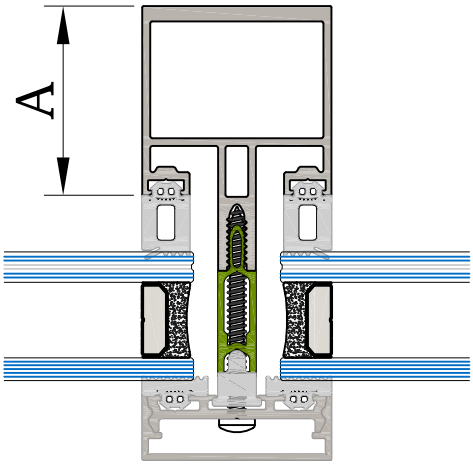	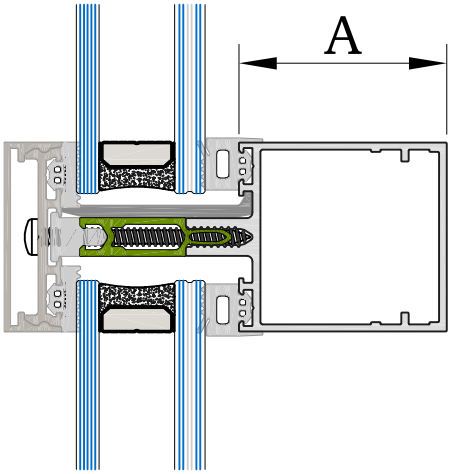

Dim "A" (mm)	Profile number	Uf (W/m²K)
70	EXL10902	2,135
100	EXL10903	2,183
130	EXL10904	2,215
160	EXL10905	2,239
190	EXL10906	2,250
220	EXL10907	2,276
250	EXL10908	2,282

Dim "A" (mm)	Profile number	Uf (W/m²K)
55	EXL10972	1,978
75	EXL10973	2,018
105	EXL10974	2,070
135	EXL10975	2,085
165	EXL10976	2,100
195	EXL10977	2,119

ECW50.4.109 Glazing - 34mm Thermal Break

Pocket Closer
ECW10883 Mullion
ECW10884 Transom

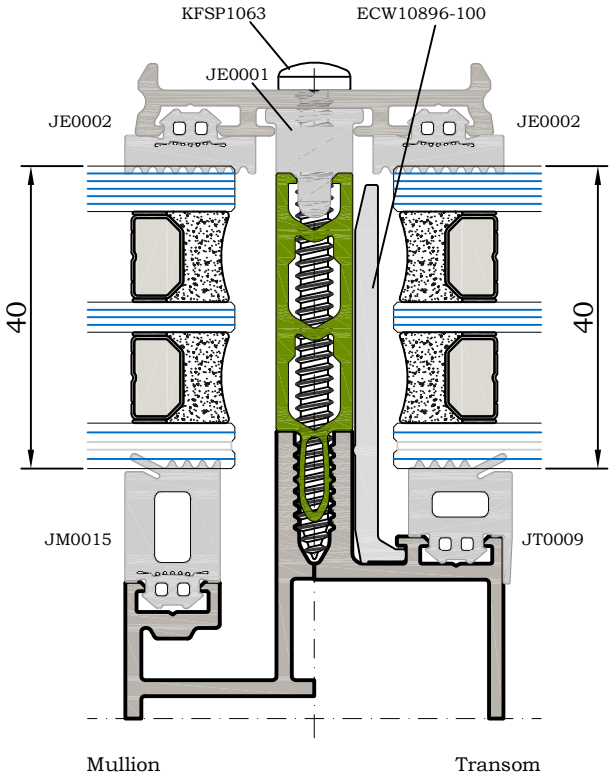

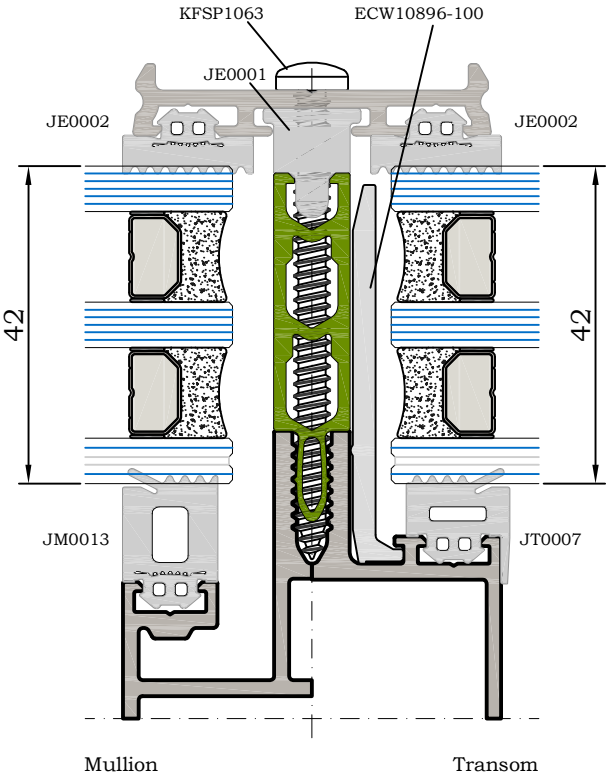

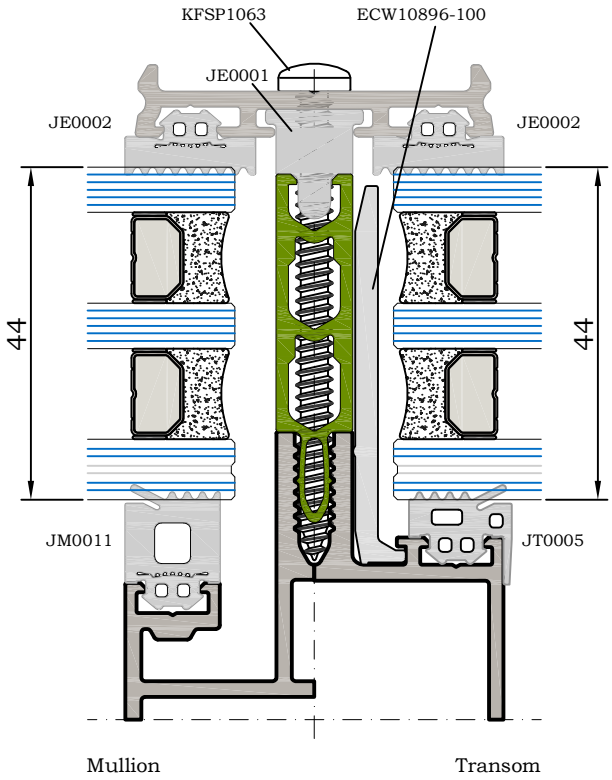

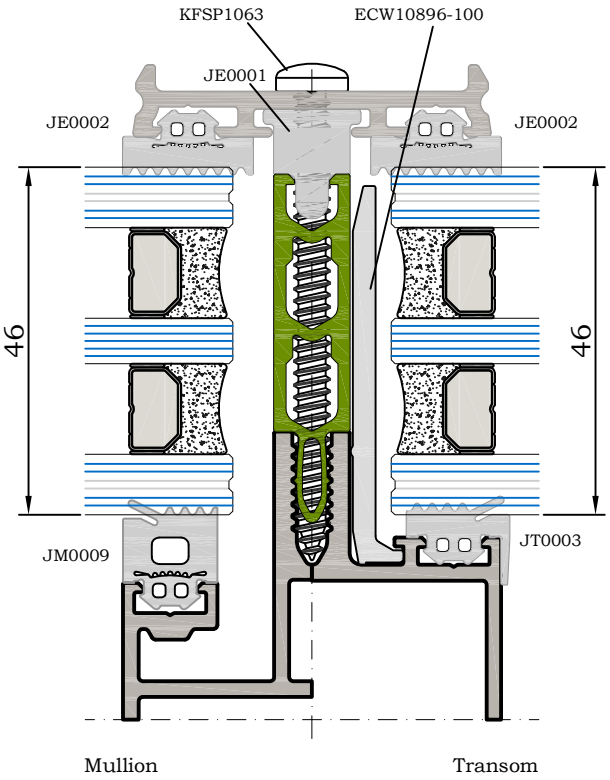

34mm *Thermal break - Improved thermal performance*
(values listed calculated using 40mm glass with insulated panel 0,035 W/mK)

Mullion	***Transom***
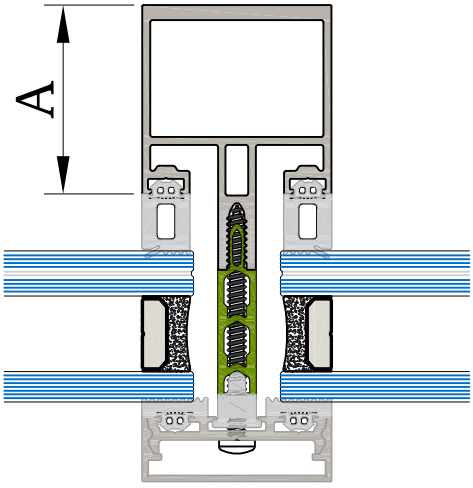	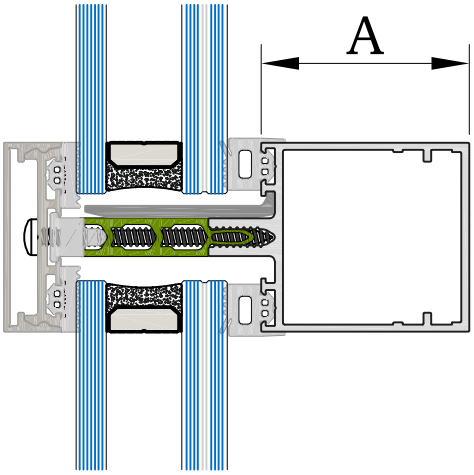

Dim "A" (mm)	Profile number	Uf (W/m²K)
70	EXL10902	1,916
100	EXL10903	1,945
130	EXL10904	1,969
160	EXL10905	1,990
190	EXL10906	1,998
220	EXL10907	2,019
250	EXL10908	2,014

Dim "A" (mm)	Profile number	Uf (W/m²K)
55	EXL10972	1,804
75	EXL10973	1.831
105	EXL10974	1,843
135	EXL10975	1,871
165	EXL10976	1,882
195	EXL10977	1,903

Measures for ***Spring clip connector & / or No shear block***
NOTE: FOR SHEAR BLOCK SEE ECW50.5.108

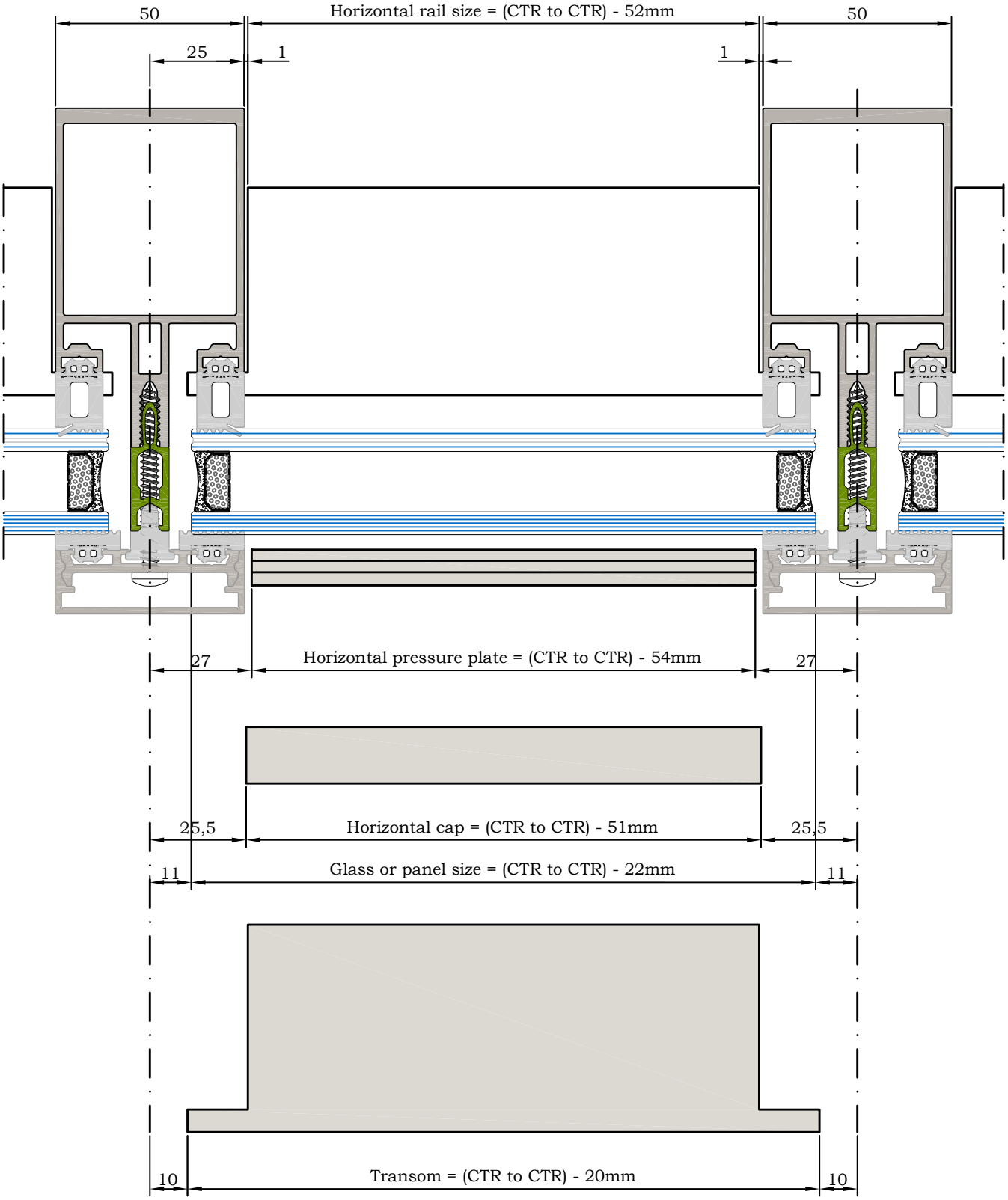

Mullion Drilling

ECW50.5.102

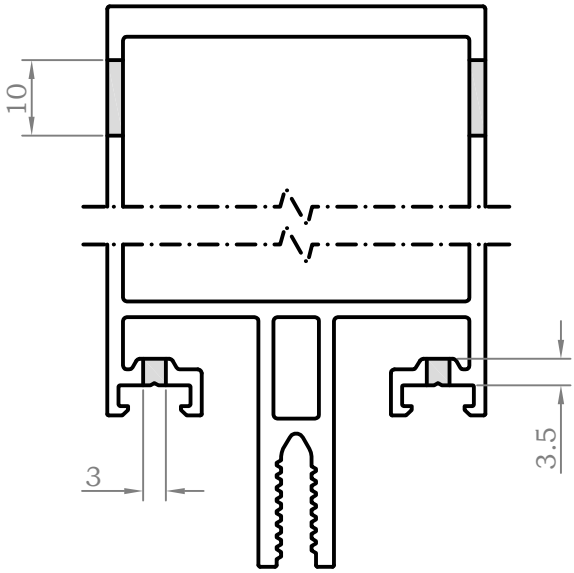

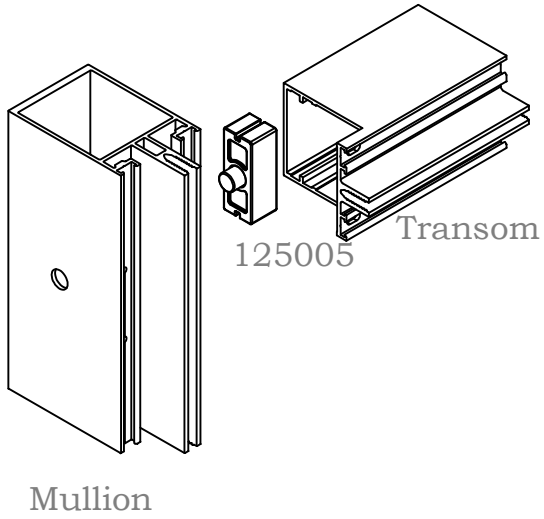

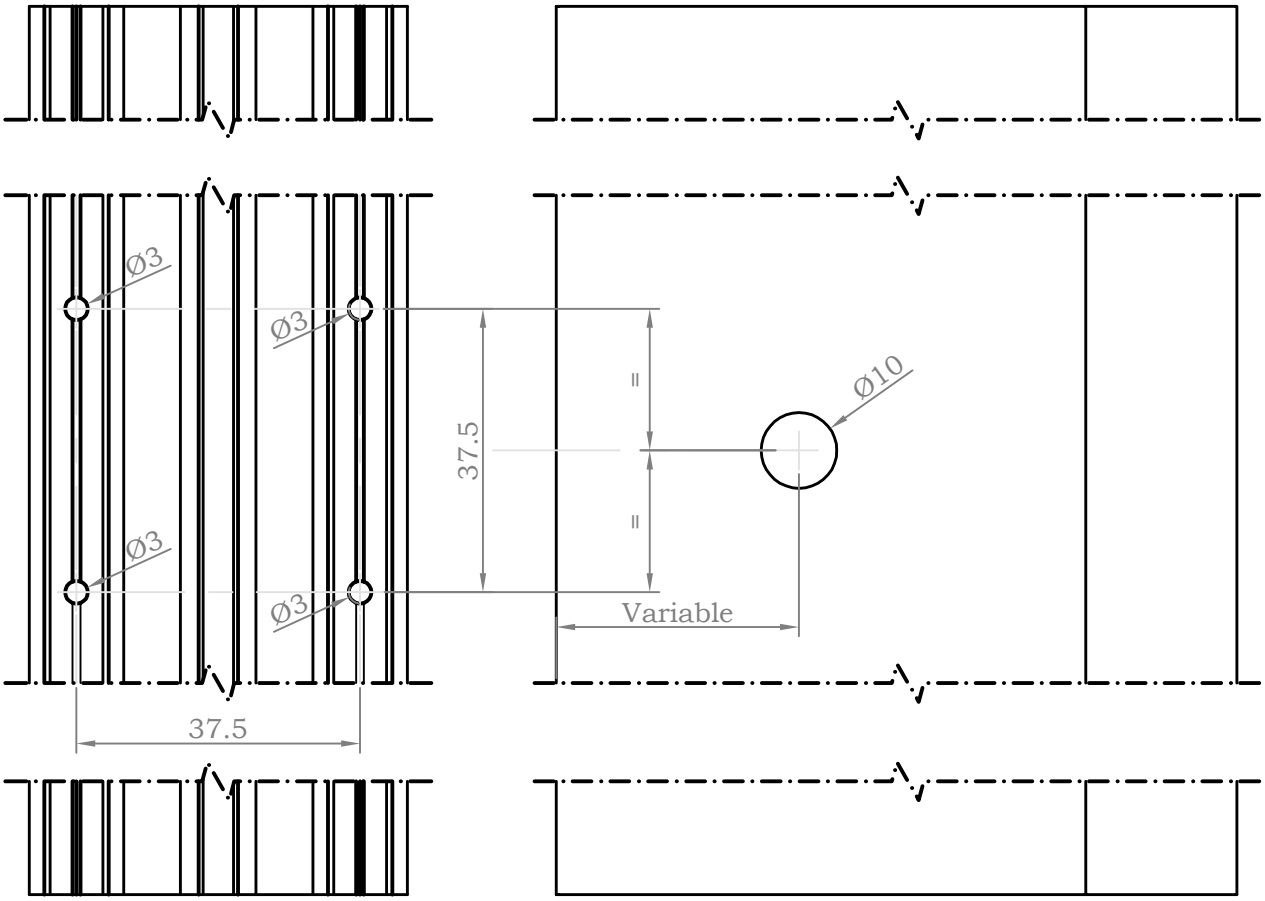

ECW50.5.103 Mullion Drilling

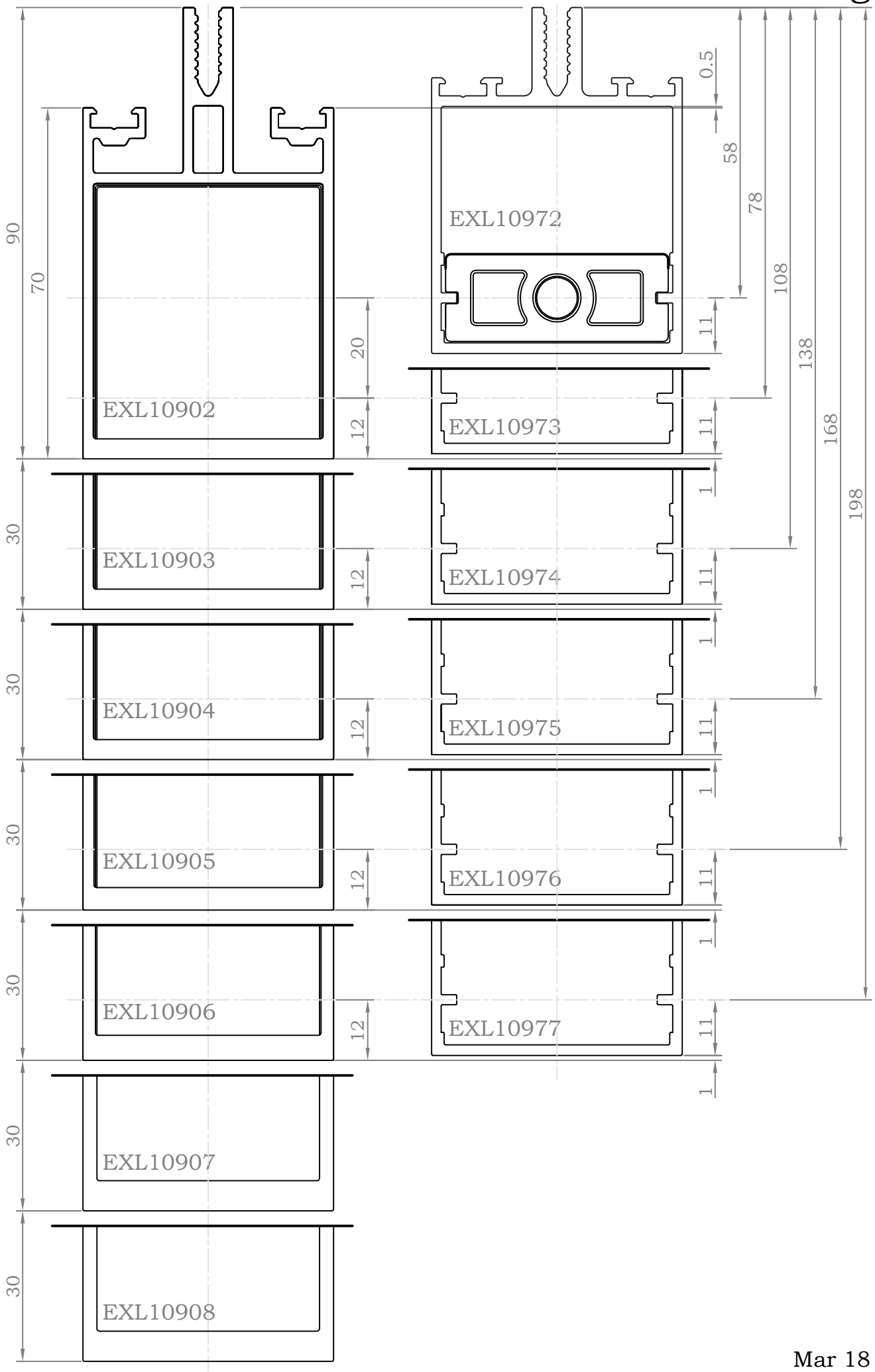

Mar 18

Transom Preparation

ECW50.5.104

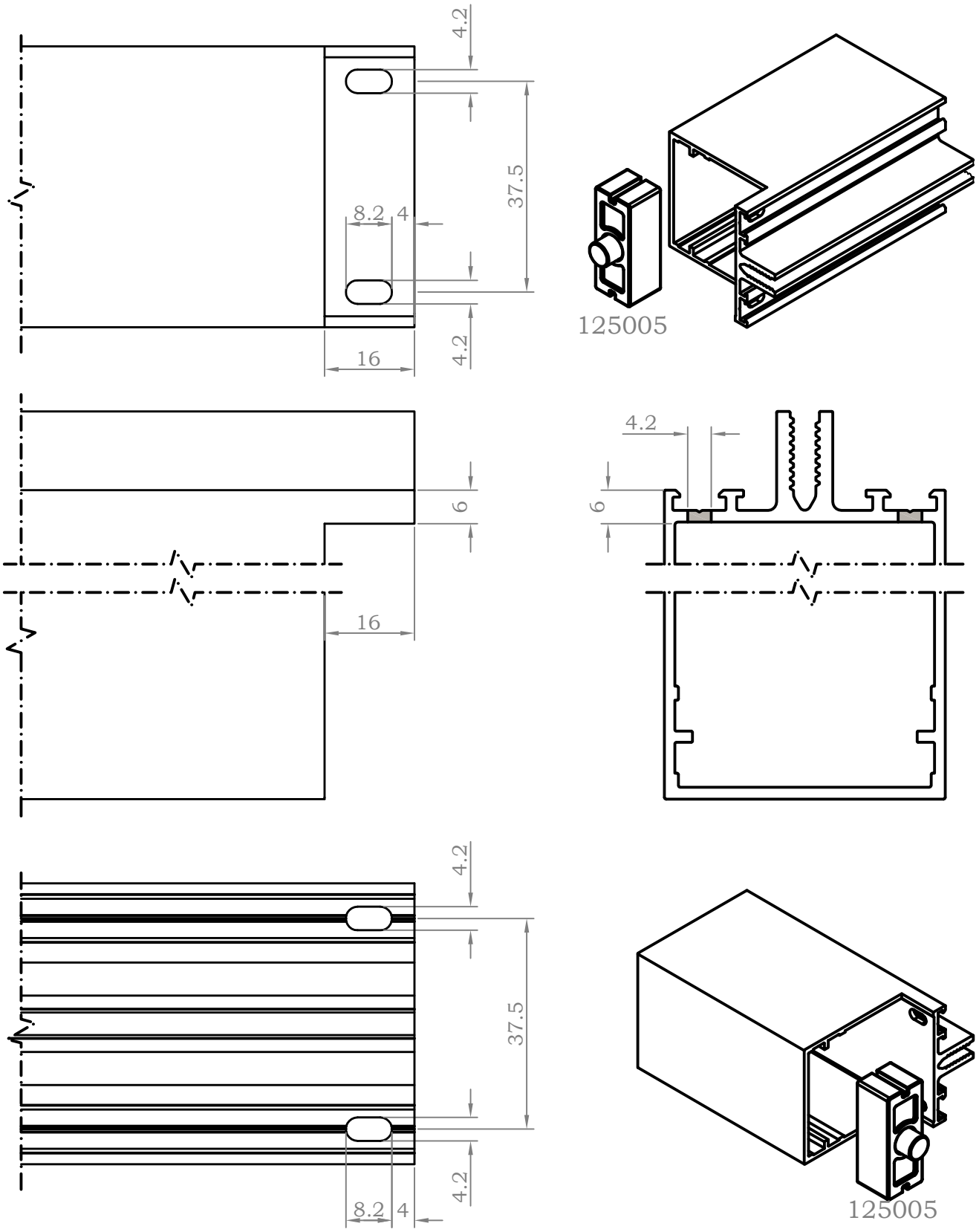

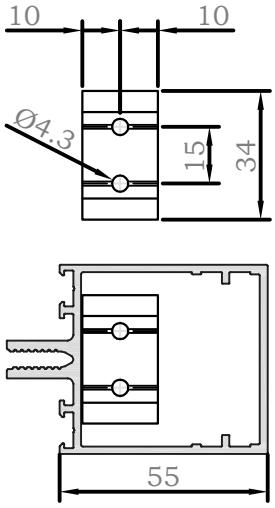

129369 + EXL10972
Shear Block - 55mm Transom

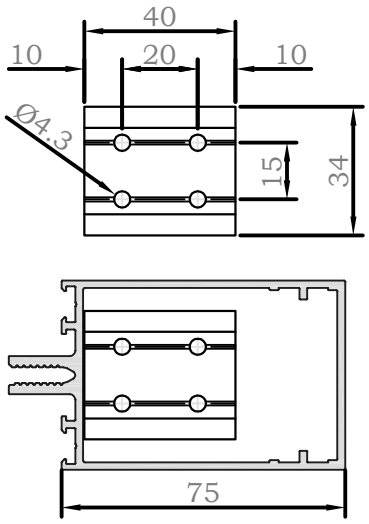

129370 + EXL10973
Shear Block - 75mm Transom

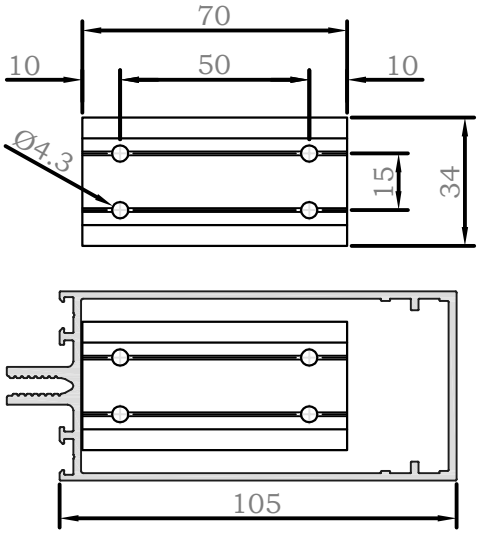

129371 + EXL10974
Shear Block - 105mm Transom

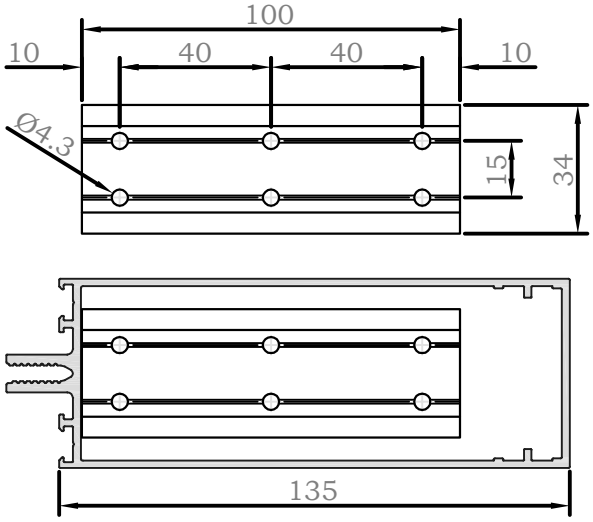

129372 + EXL10975
Shear Block - 135mm Transom

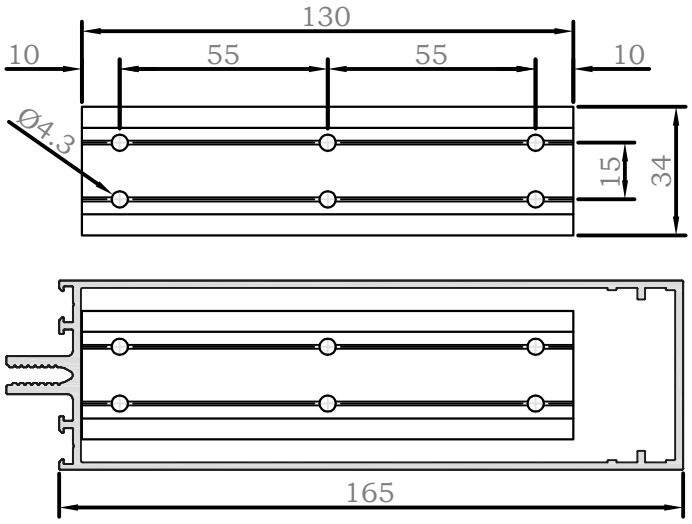

129373 + EXL10976
Shear Block - 165mm Transom

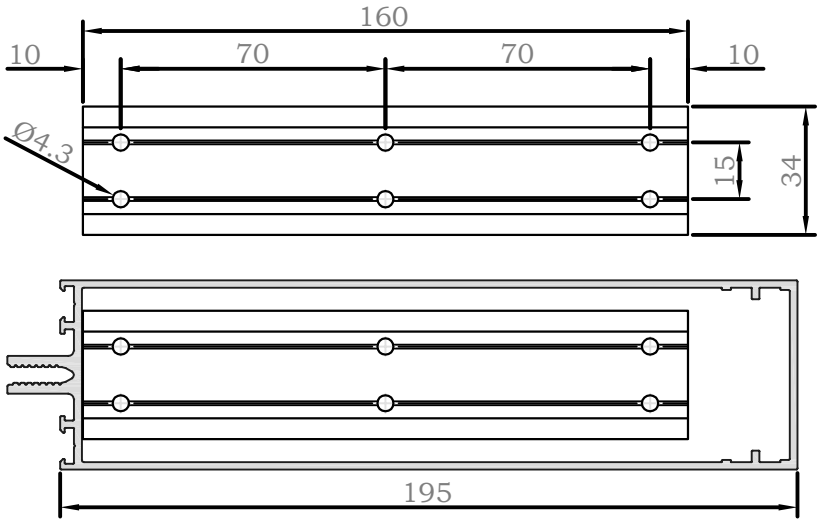

129374 + EXL10977
Shear Block - 195mm Transom

ECW50.5.107 Transom Shear Block

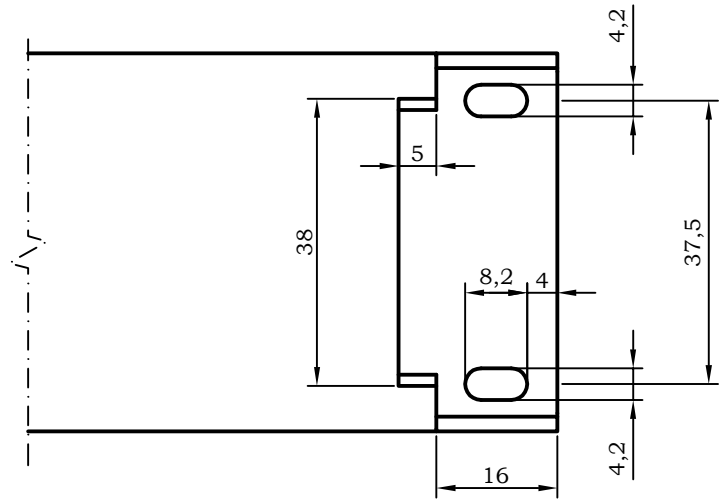

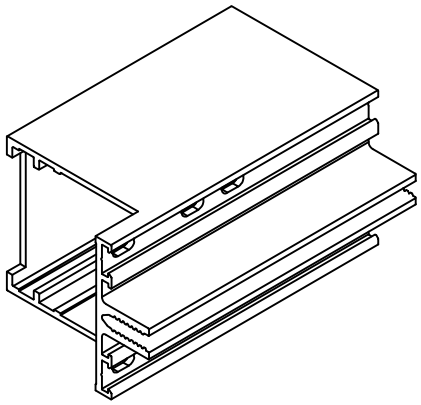

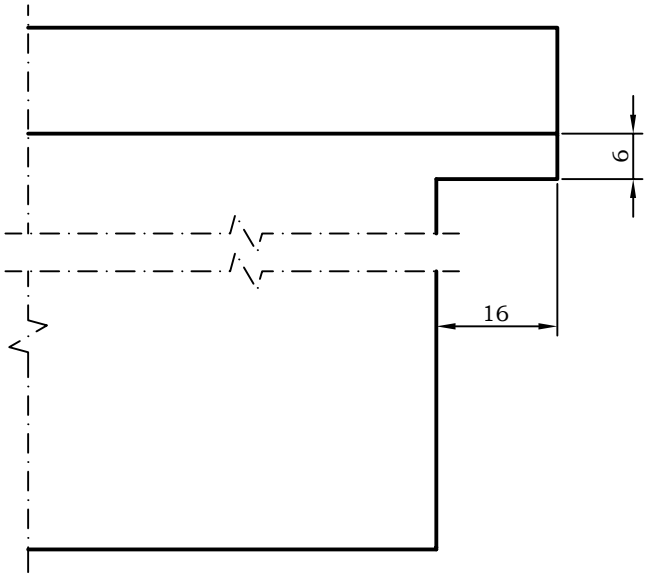

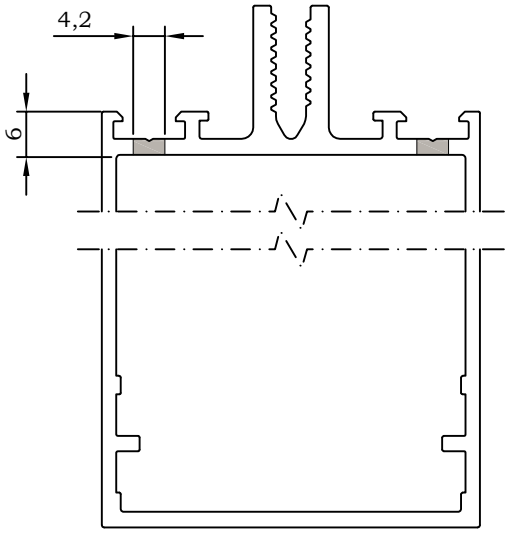

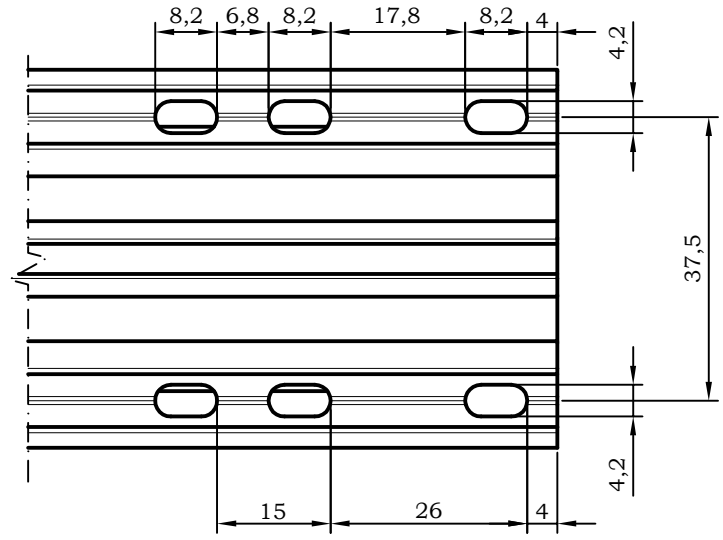

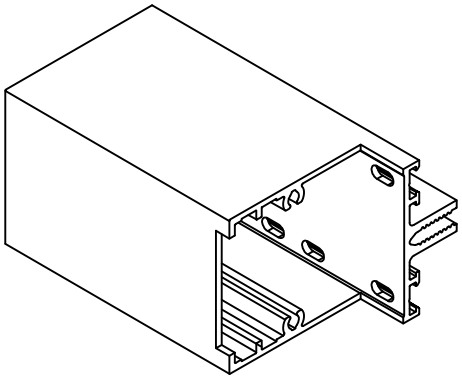

Transom Shear Block ECW50.5.108

Measures for ***Standard shear block***

NOTE: FOR SPRING CLIP OR NO SHEAR BLOCK SEE ECW50.5.101

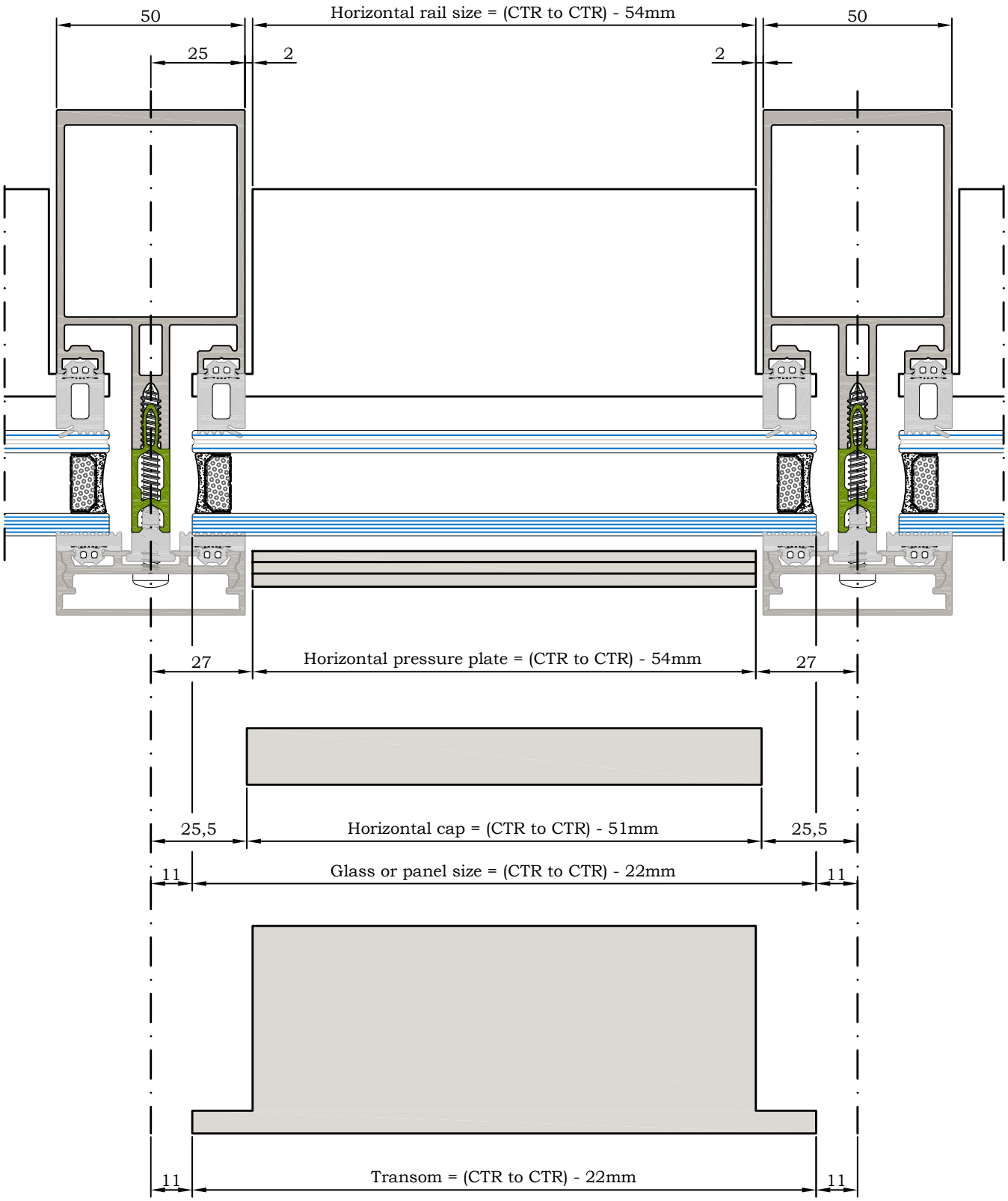

ECW50.5.109 Transom Shear Block

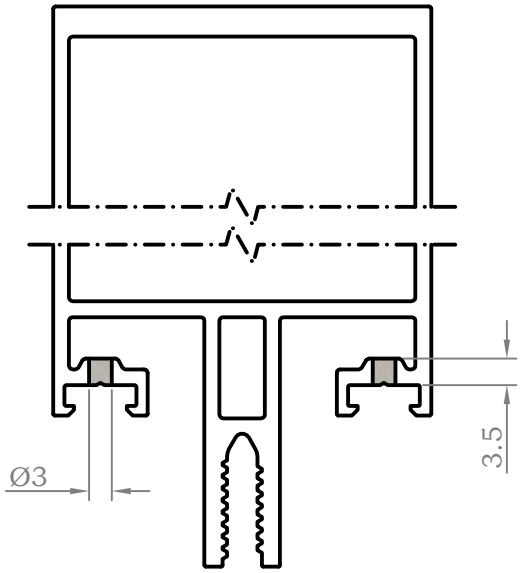

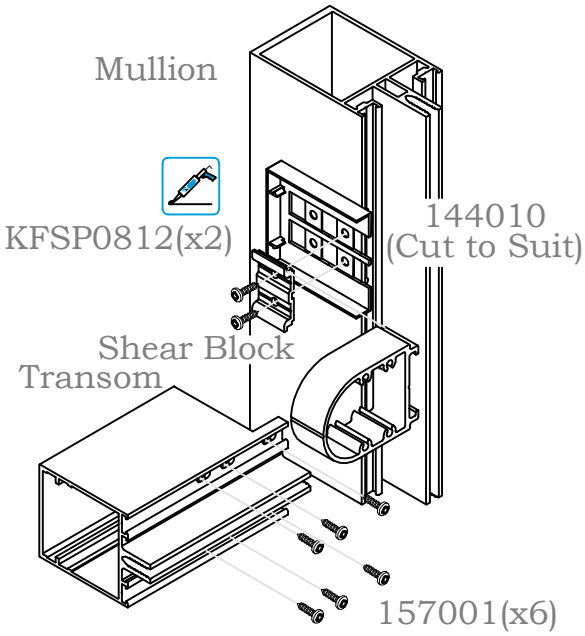

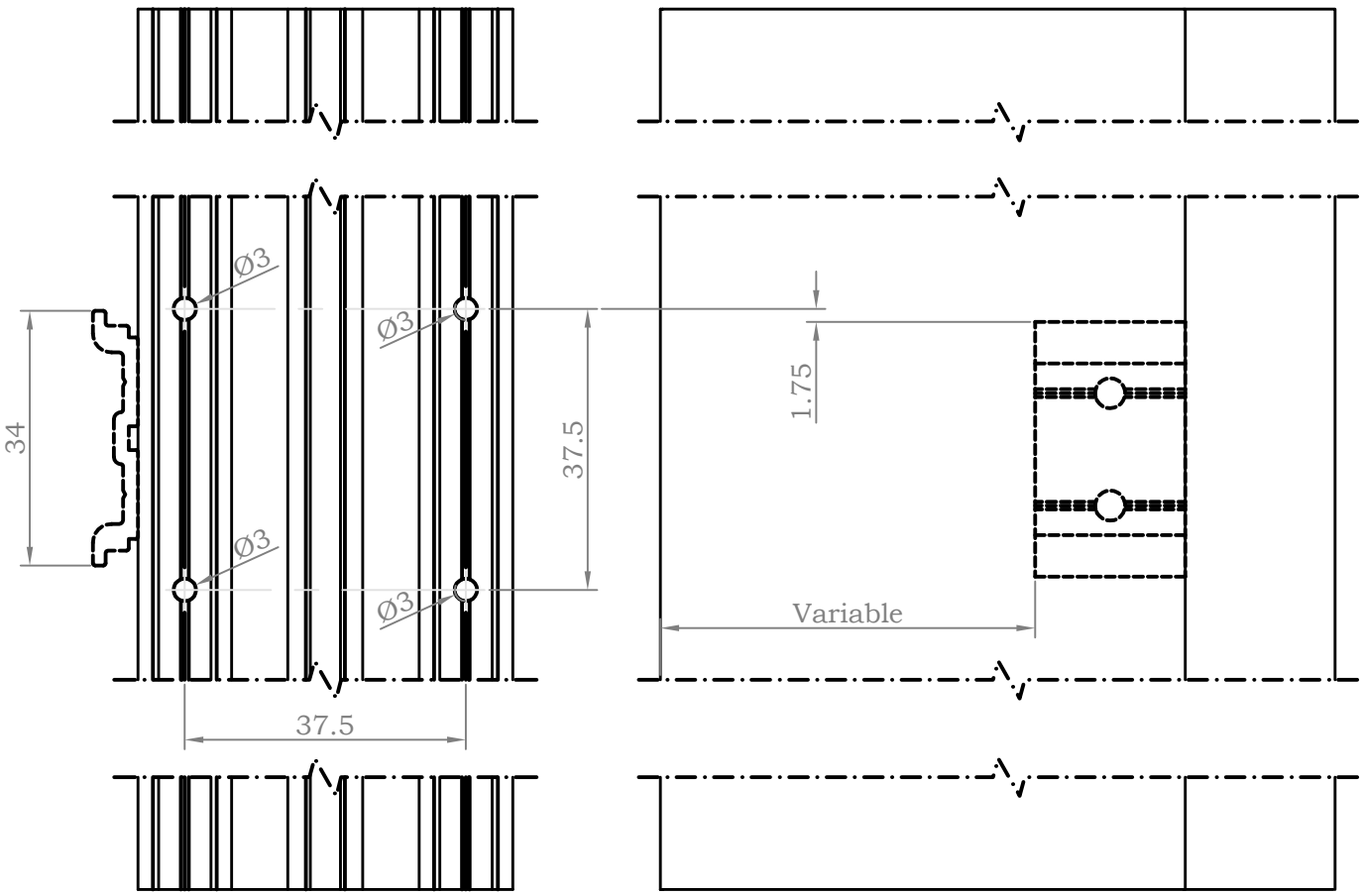

Mar 18

Aluminium Pressure Plate ECW50.5.110

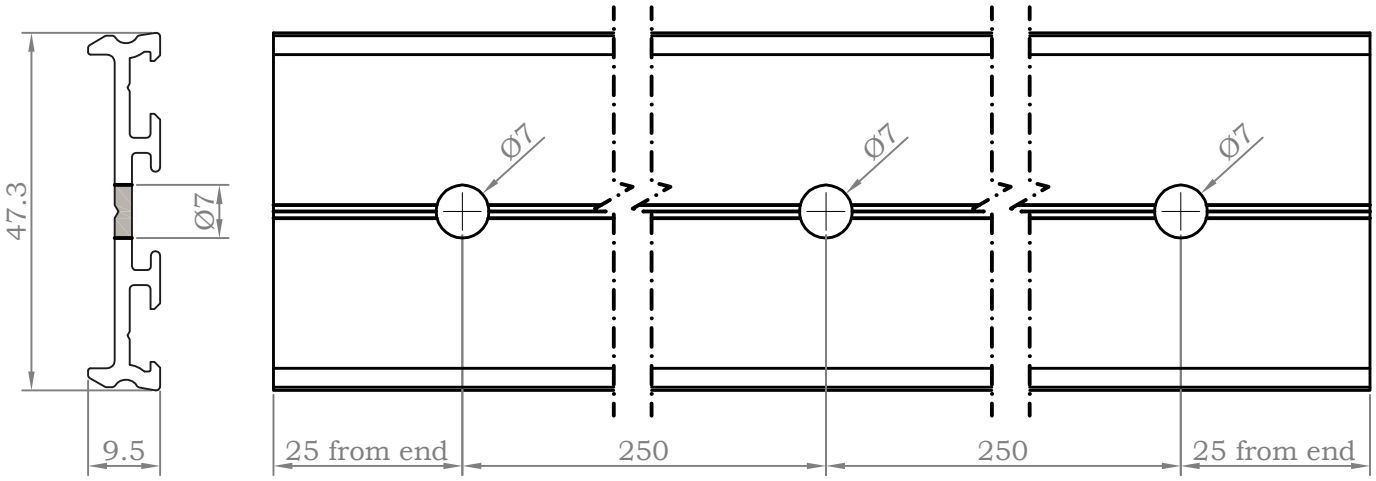

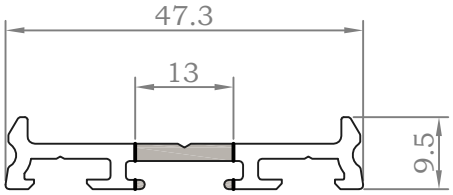

Position 13 x 35 slots for drain spouts above expansion joints and every 2 story height below a transom. Maximum of 6m between drain spouts

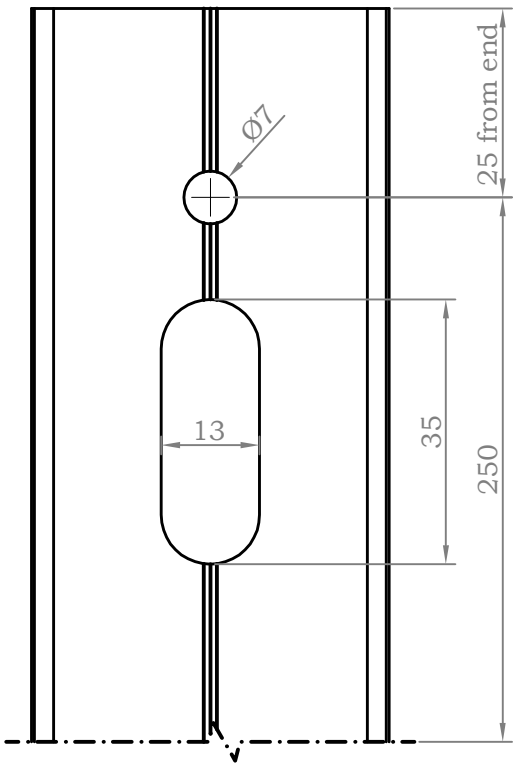

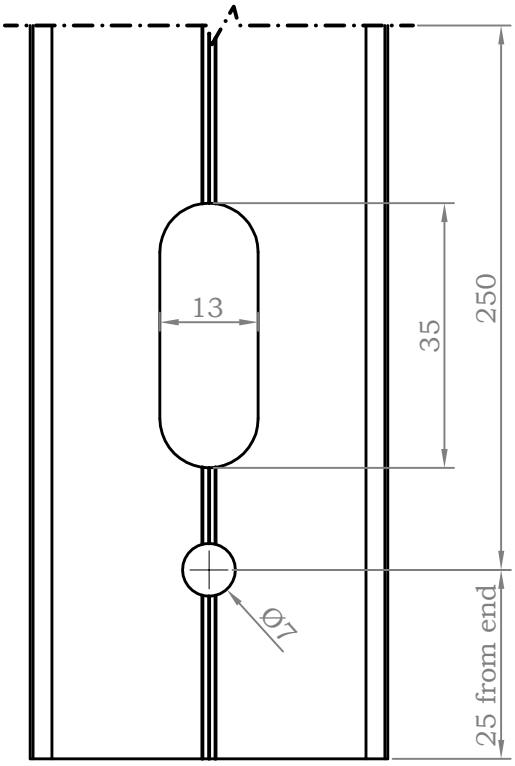

Sep 19

ECW50.5.111 Pressure Plate Drainage

EXL10980

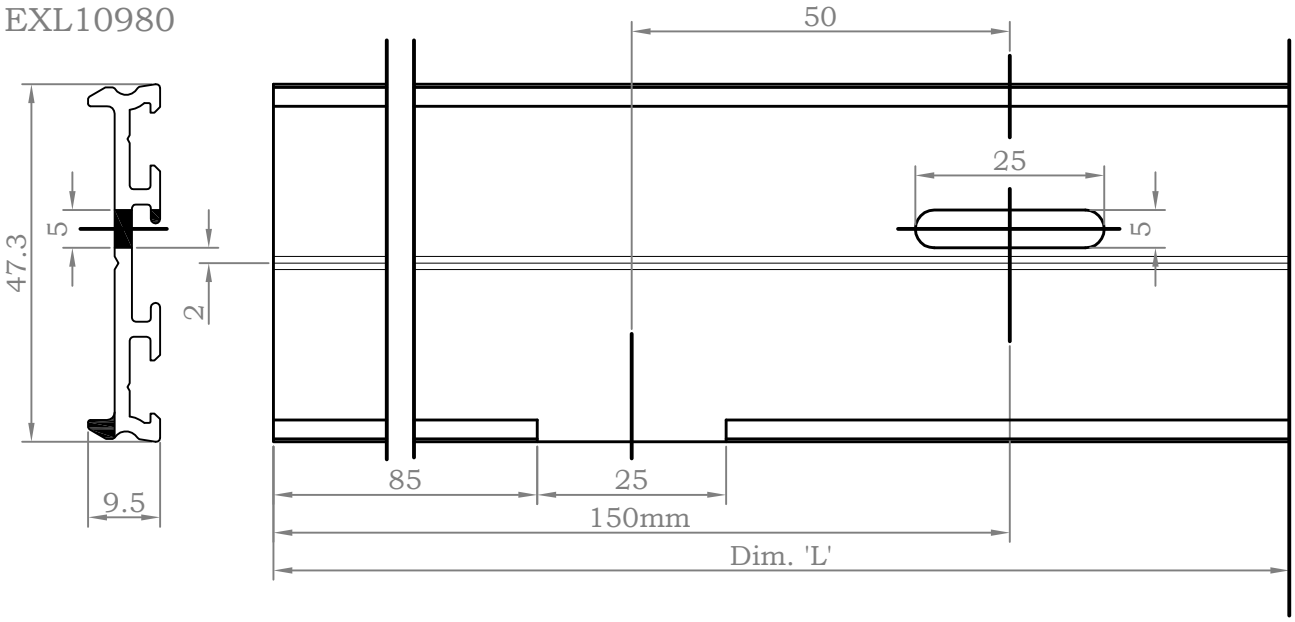

JE0001

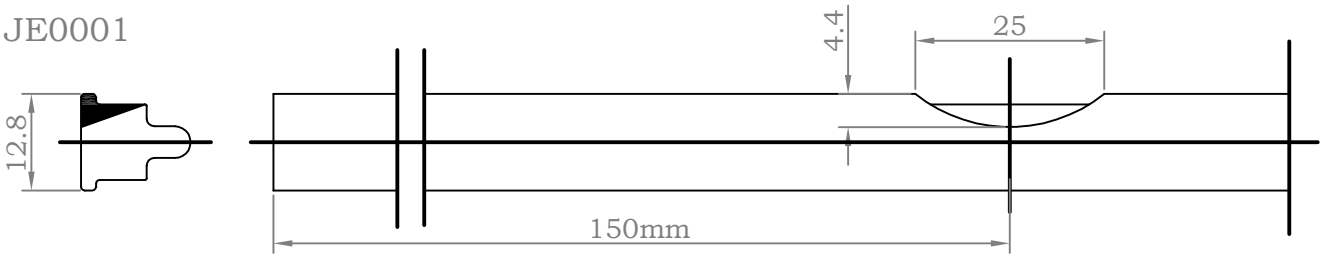

EXL10981

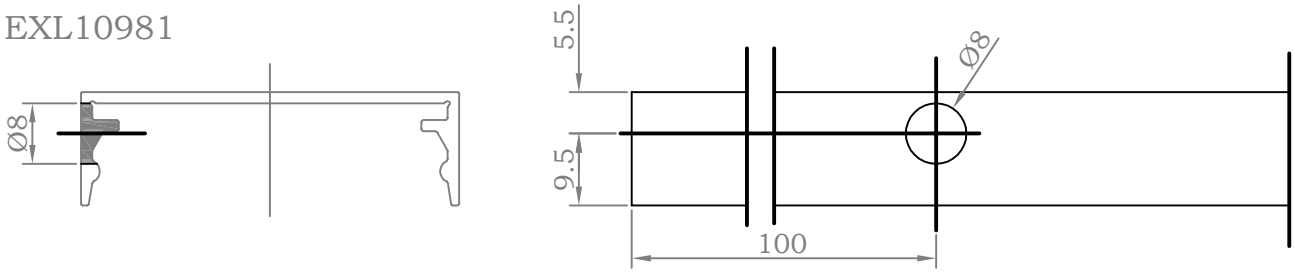

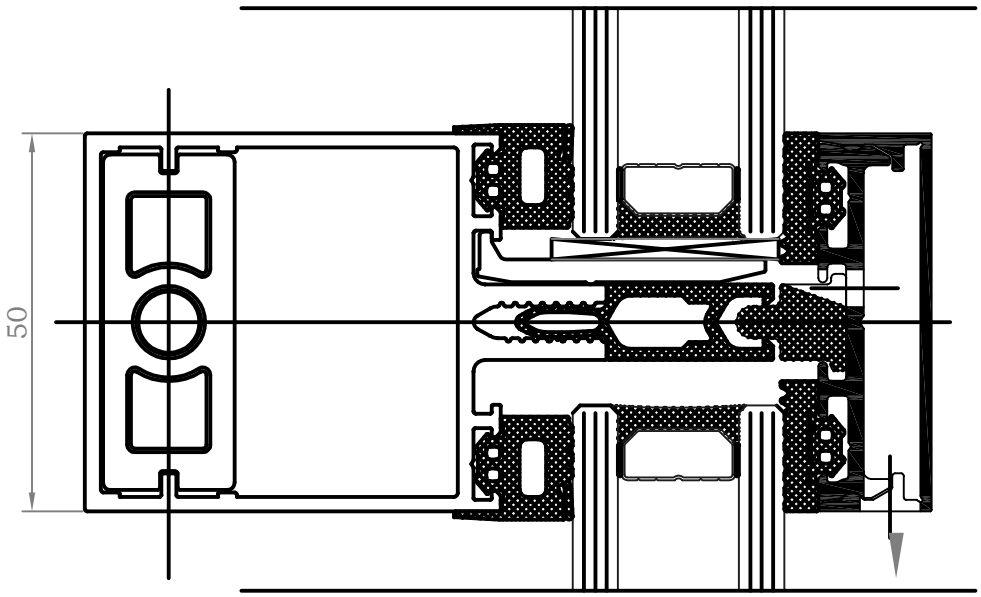

Note:
L <= 1500 - 2 Slots
1500<L<=2500 - 3 Slots
L>2500 - 4 Slots

Machining Type 1

Transom 2nd Level

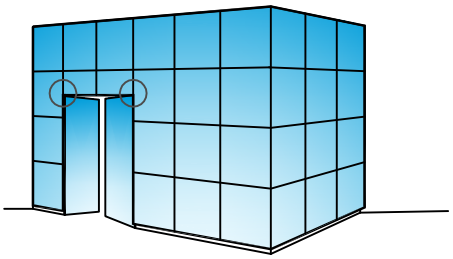

EXL10956

Transom 2 nd level 160 mm

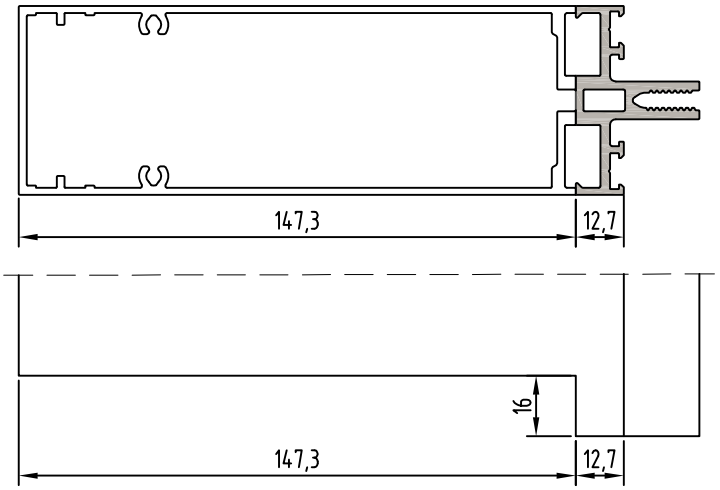

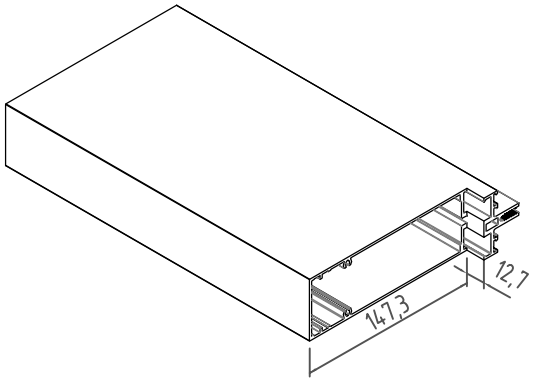

EXL10905 / EXL10906 / EXL10907 / EXL10908

Mullion 160 / 190 / 220 mm / 250mm

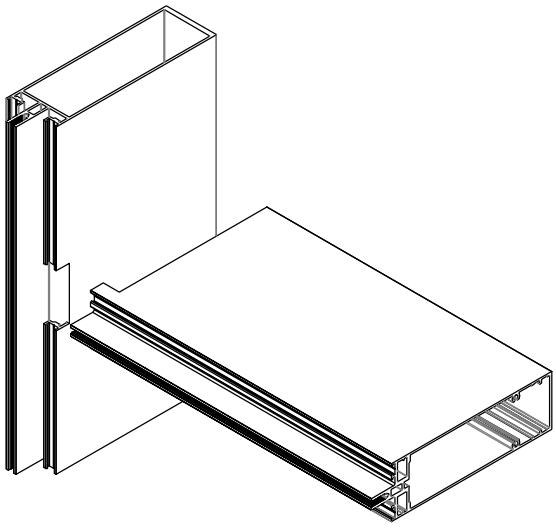

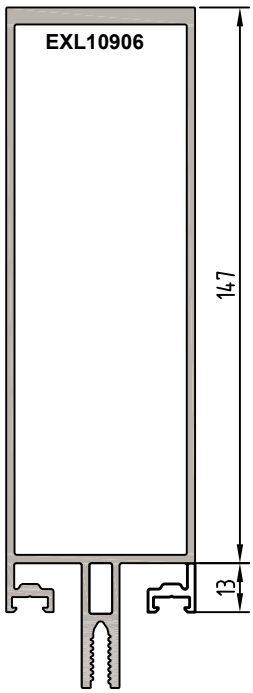

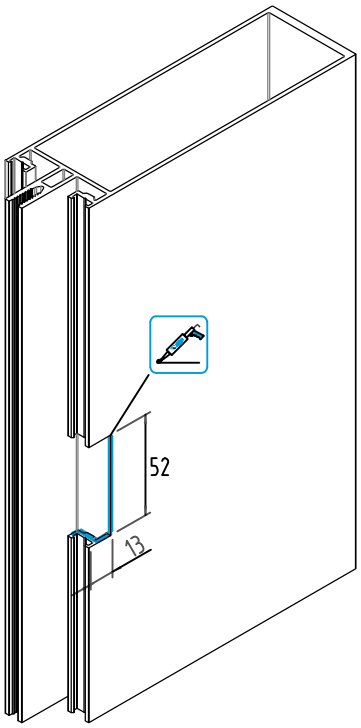

EXL10956

Transom 2 nd level 160 mm

Machining Type 2

Transom 2nd Level

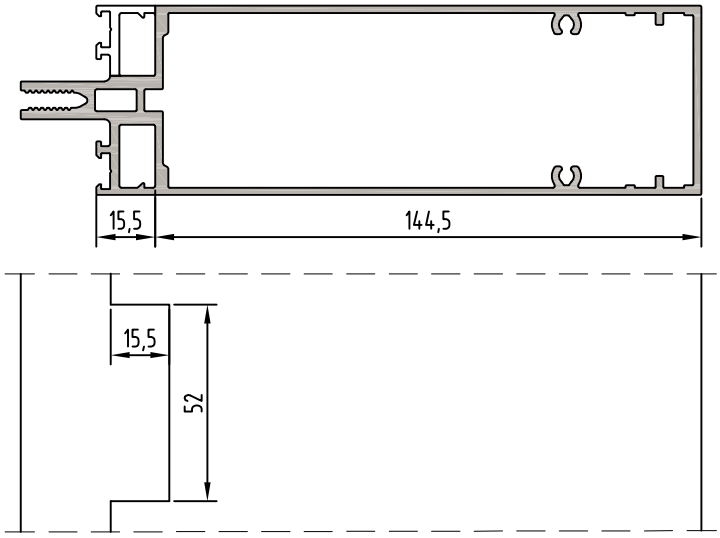

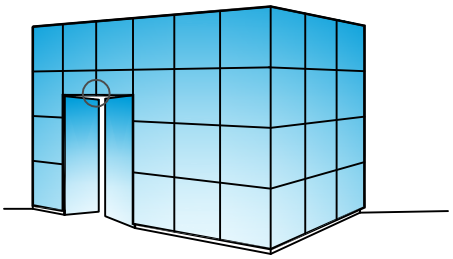

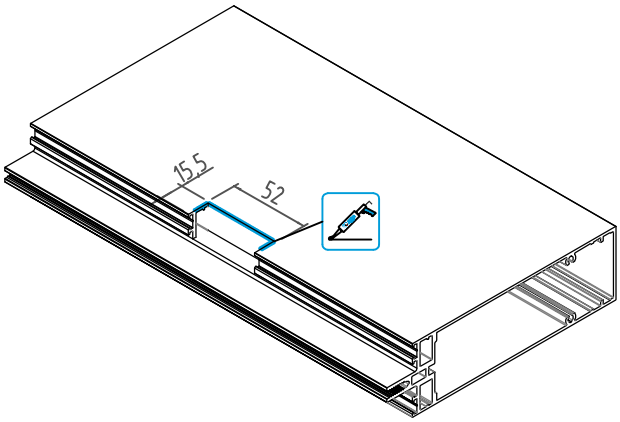

EXL10905 / EXL10904 / EXL10903 / EXL10902

Mullion 160 / 135 / 100 / 70 mm

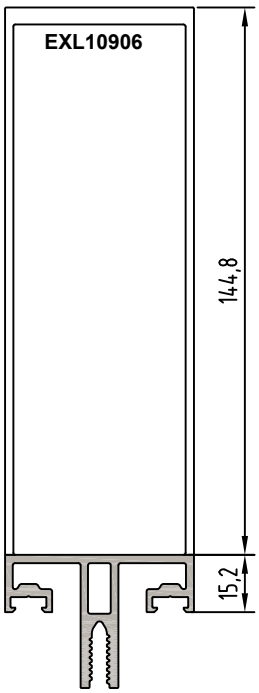

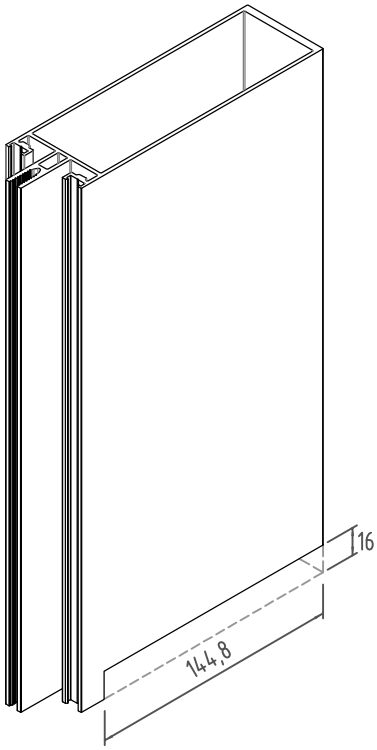

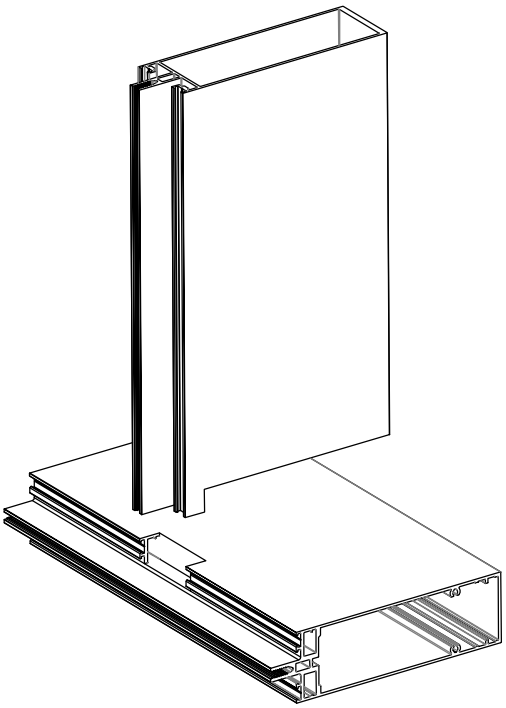

Machining Type 3

Transom 2nd Level

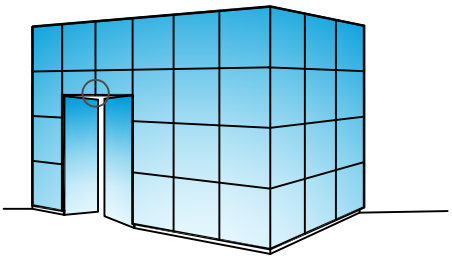

EXL10956

Transom 2 nd level 160 mm

Travesaño · Traverse · Rygiel · Querstange

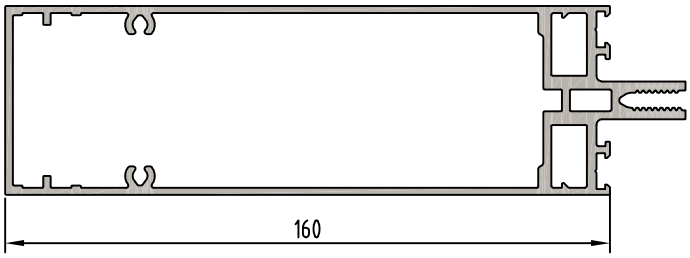

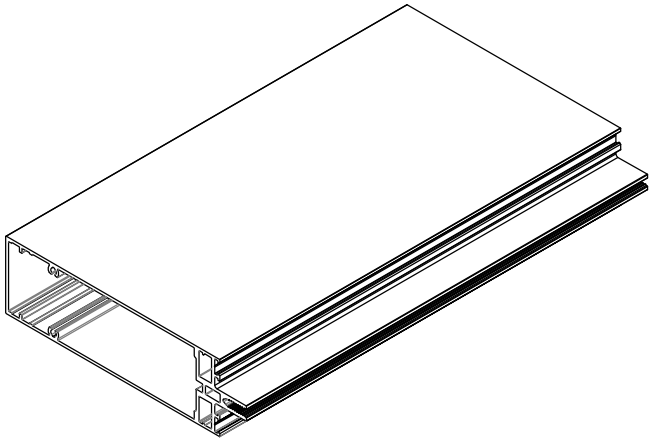

EXL10972 / EXL10973 / EXL10974 / EXL10975 / EXL10976

Transom 55 / 75/ 105 / 135 / 165 mm

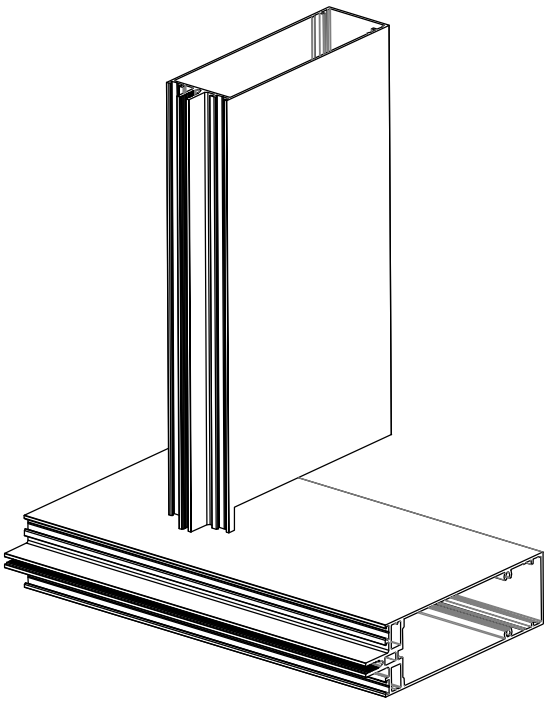

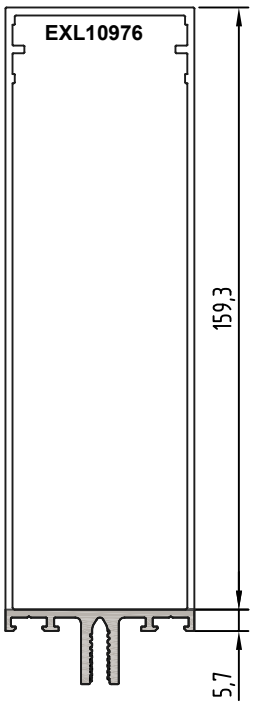

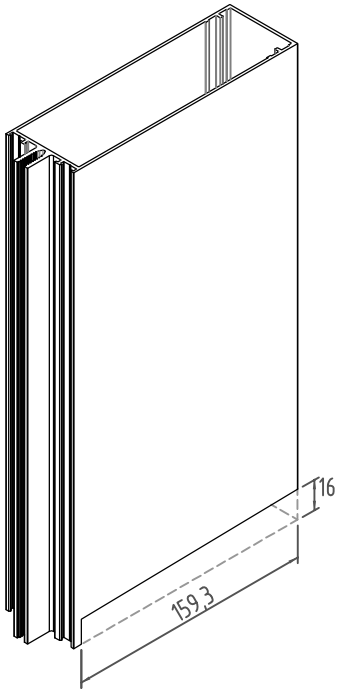

ECW50.6.101 Typical Mullion & Transom Joint

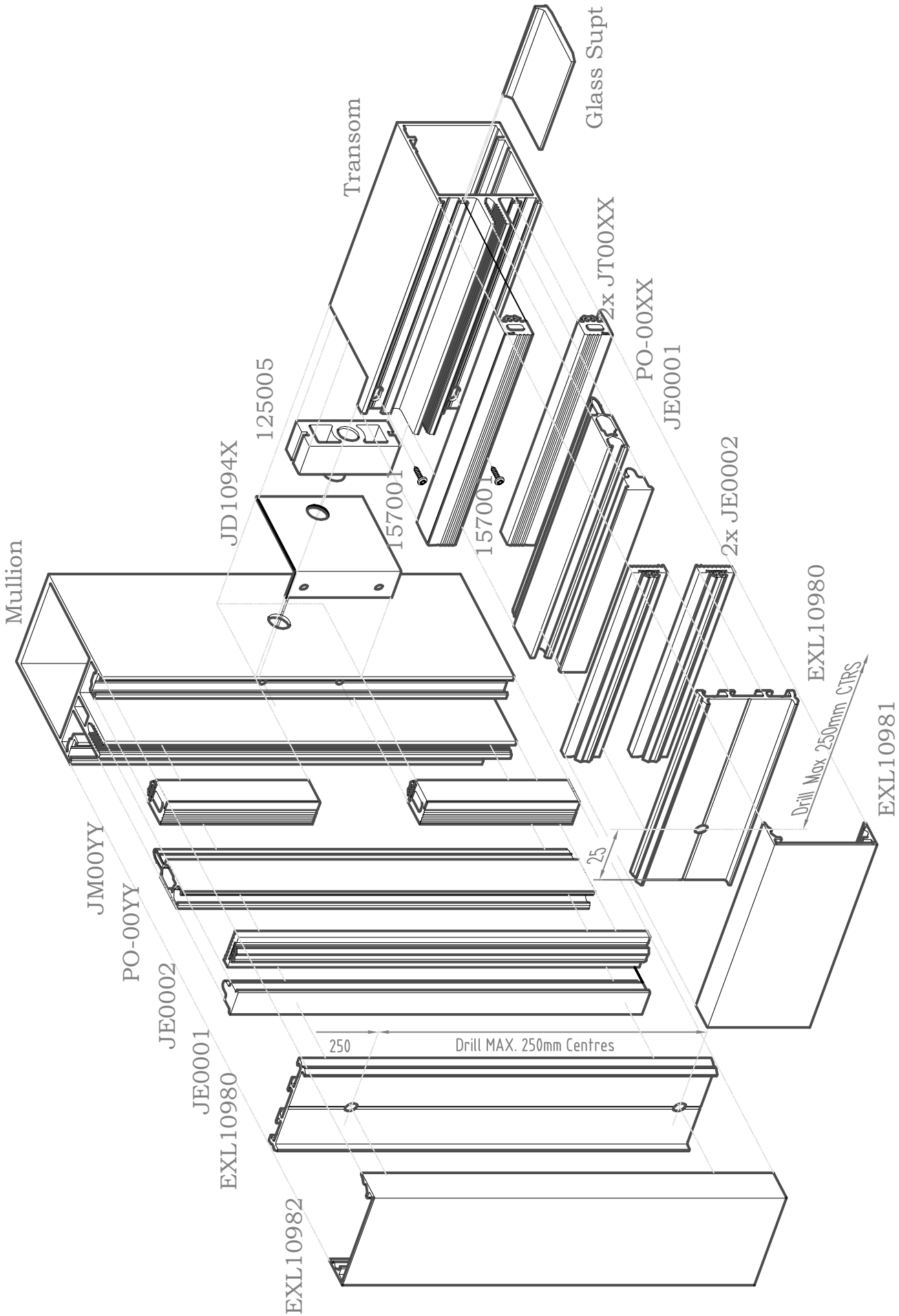

Drain Spouts

ECW50.6.102

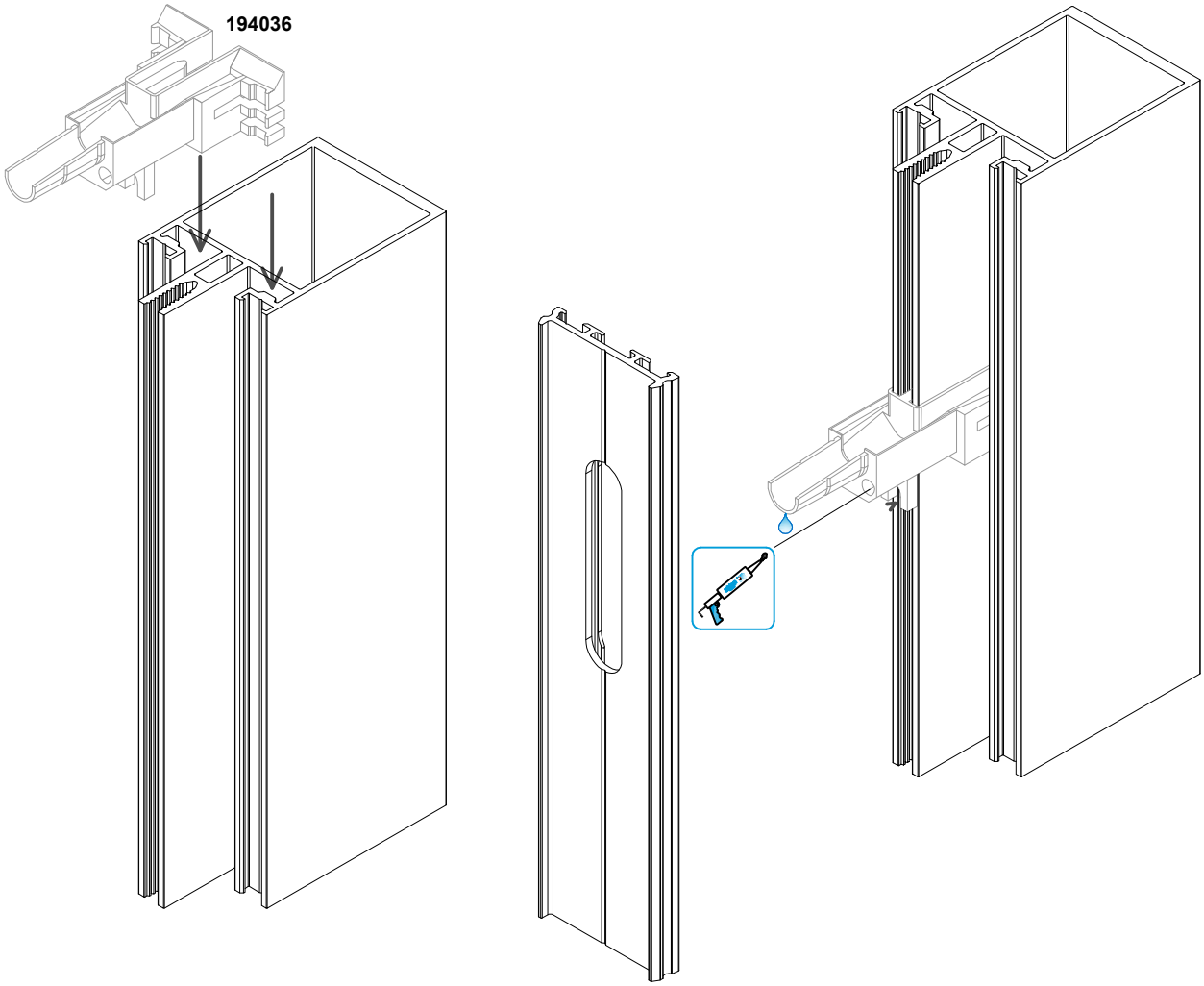

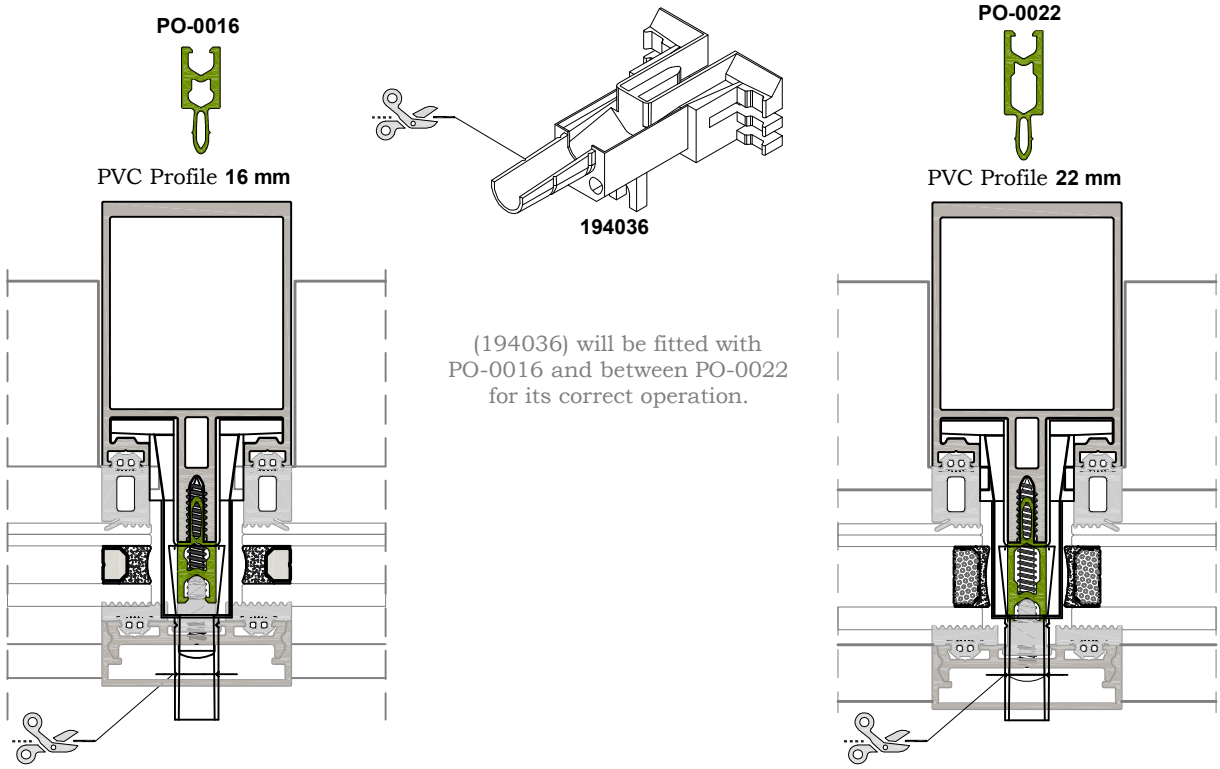

(194036) will be fitted with
PO-0016 and between PO-0022
for its correct operation.

ECW50.6.103 Assembly - Cap & Plates

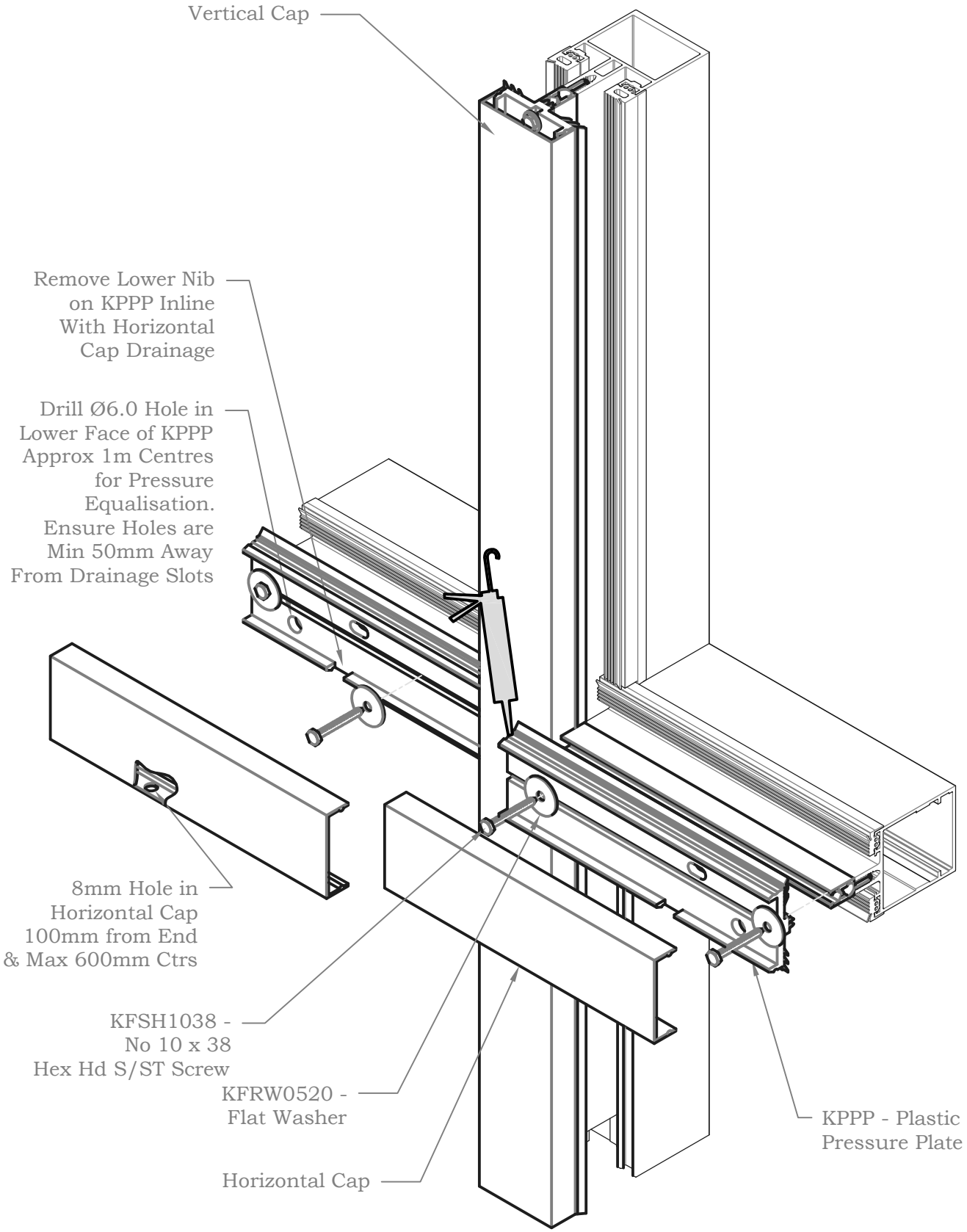

Mullion Expansion Joint

ECW50.6.104

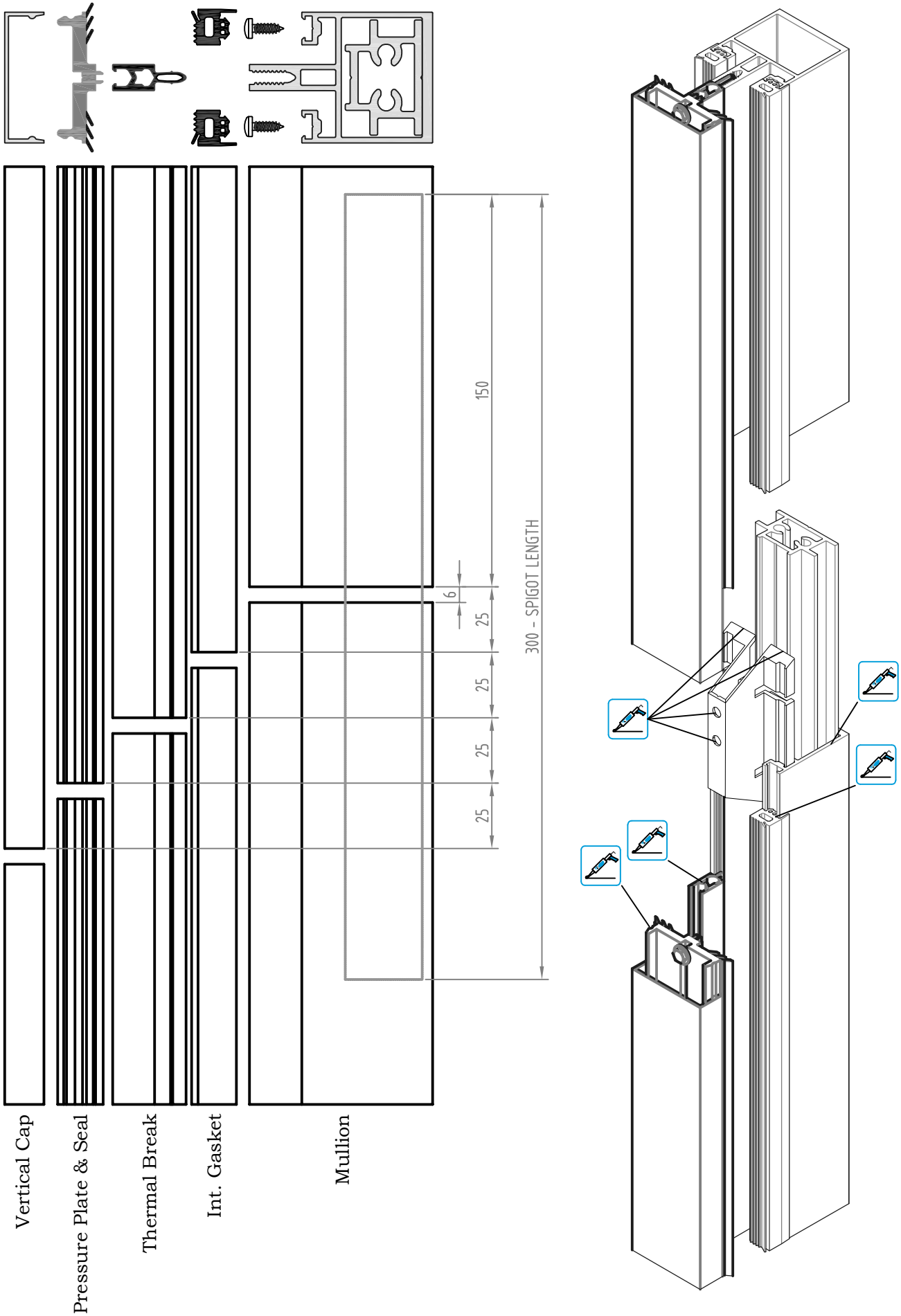

Jul 16

ECW50.6.105 Drainage / Ventilation Spouts

ECW-50 **Expansion joints and drainage / ventilation spouts**

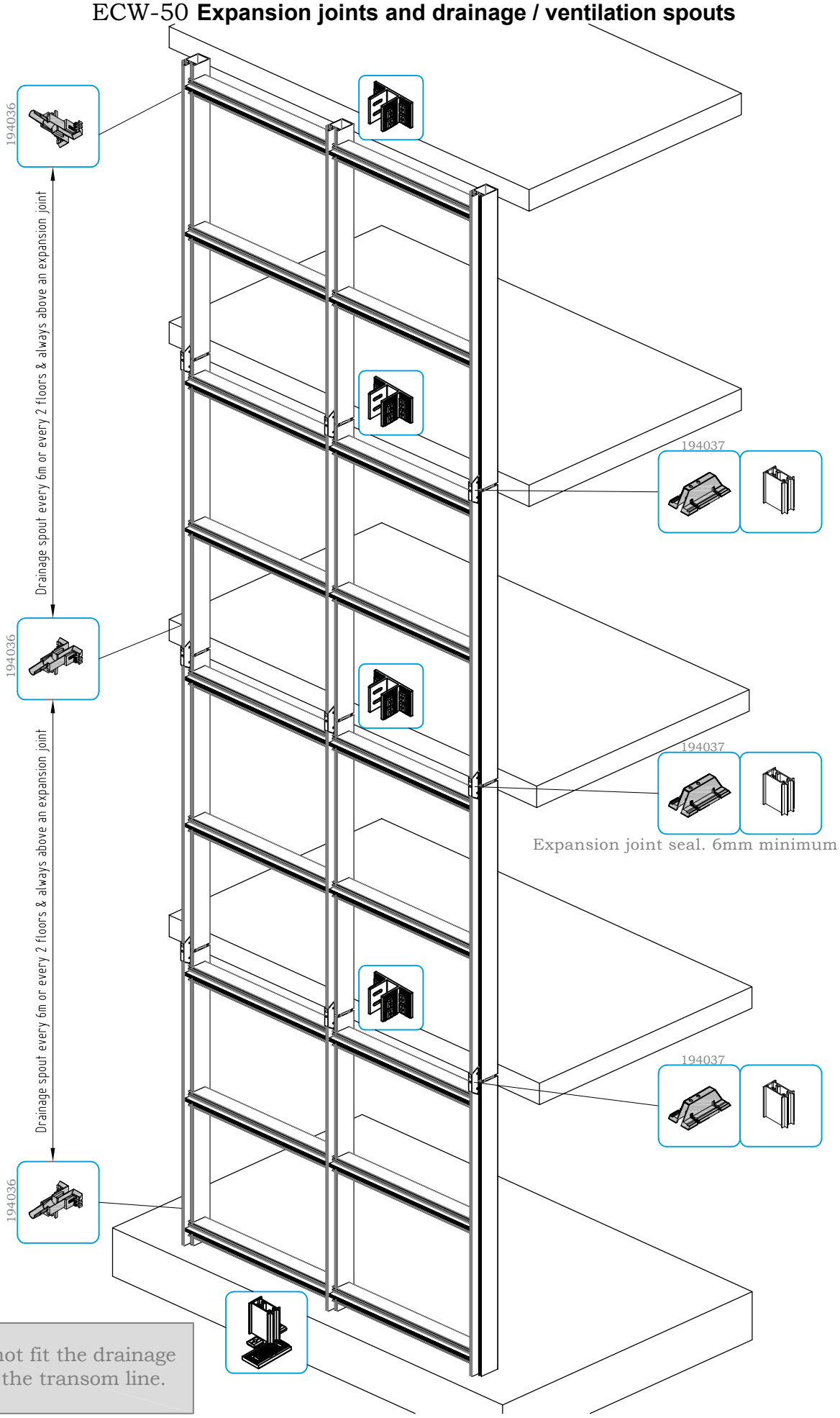

NOTE: Do not fit the drainage spouts on the transom line.

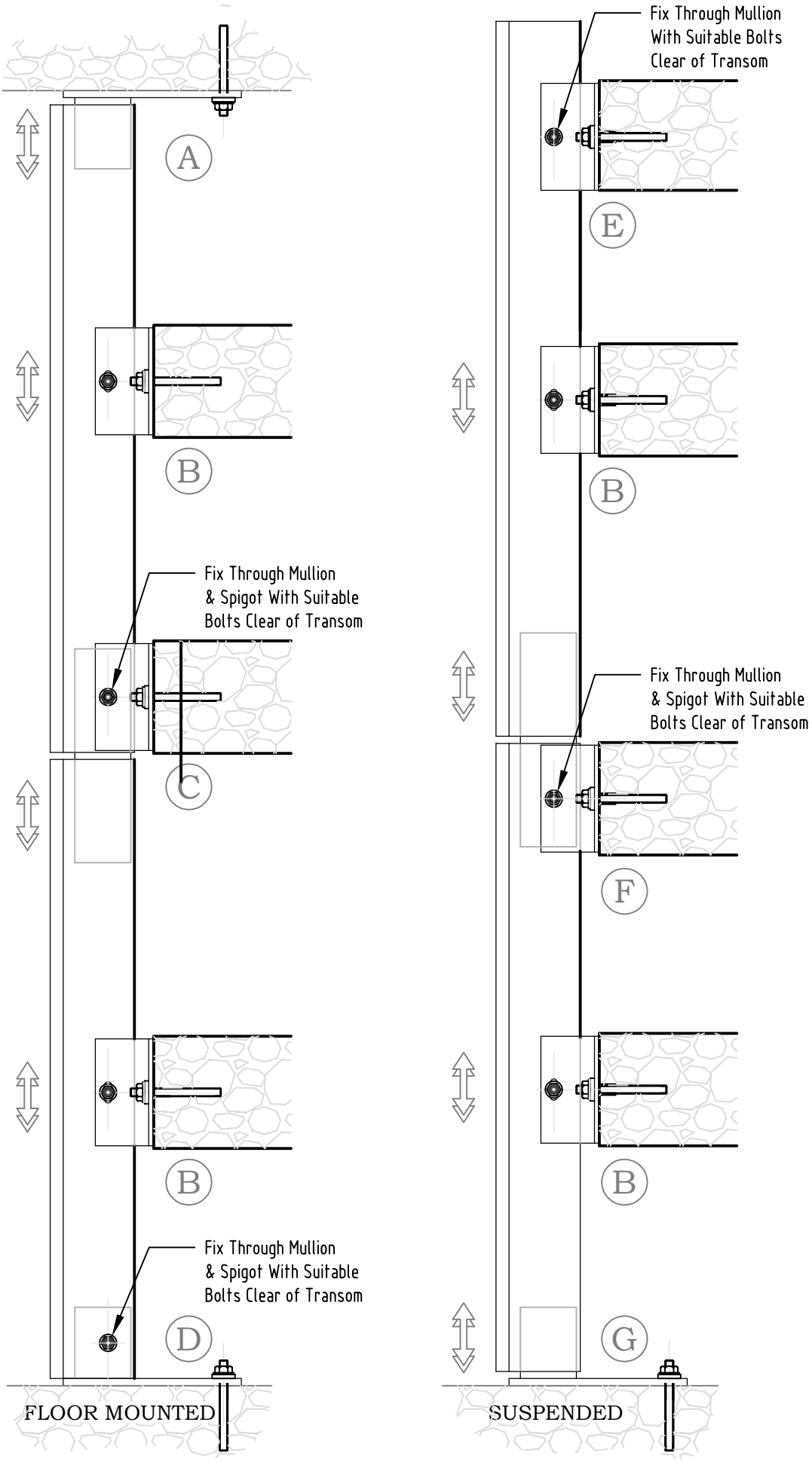
A
B
Fix Through Mullion
& Spigot With Suitable
Bolts Clear of Transom
C
B
Fix Through Mullion
& Spigot With Suitable
Bolts Clear of Transom
D
FLOOR MOUNTED
Fix Through Mullion
With Suitable Bolts
Clear of Transom
E
B
Fix Through Mullion
& Spigot With Suitable
Bolts Clear of Transom
F
B
G
SUSPENDED

Fixing Brackets

ECW50.7.102

Machine Brackets to Suit Structure
& Design to Accommodate
Building Movement
PTFE Washers May be Required
Between Bracket & Mullion Surfaces
All Fixings Should be Checked by
a Structural Engineer

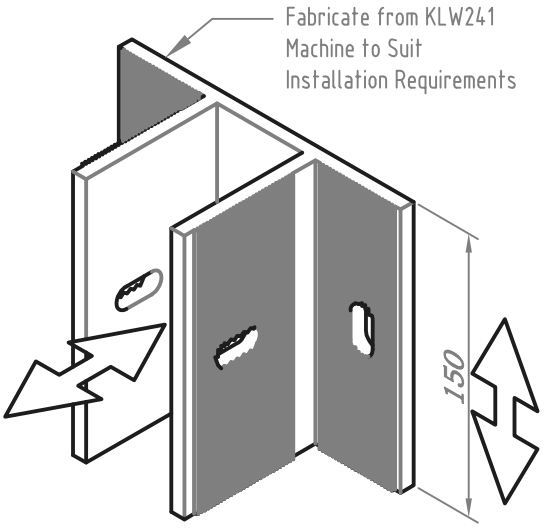

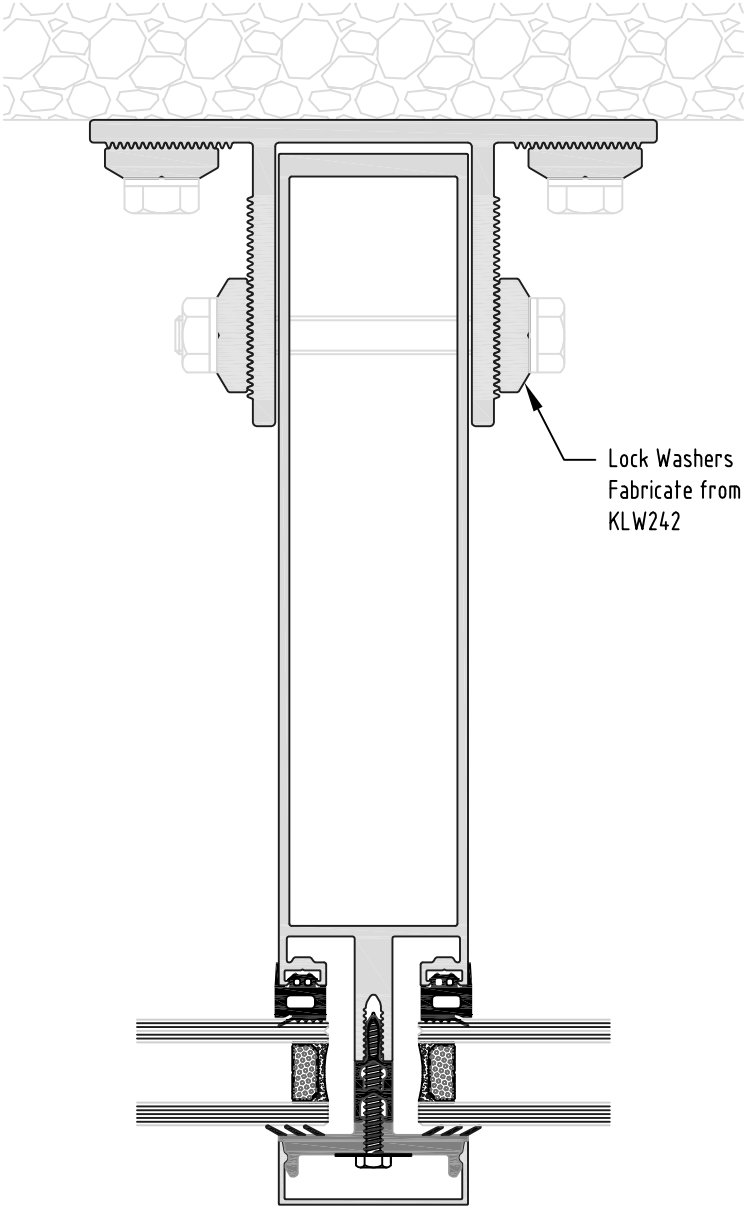

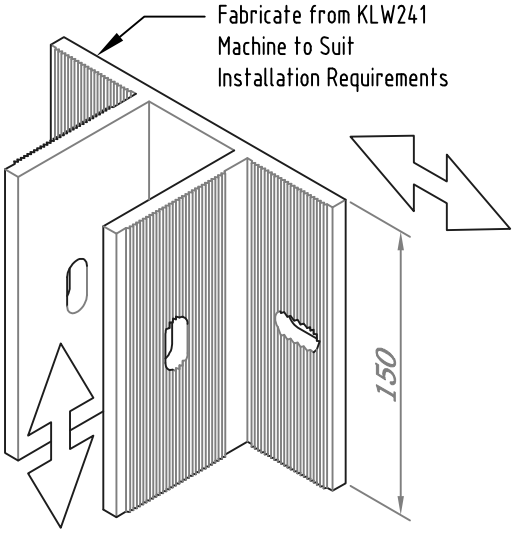

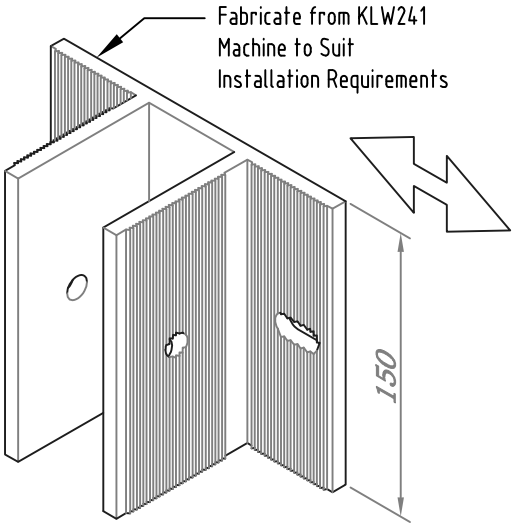

ECW50.7.103 Floor & Soffit Spigot

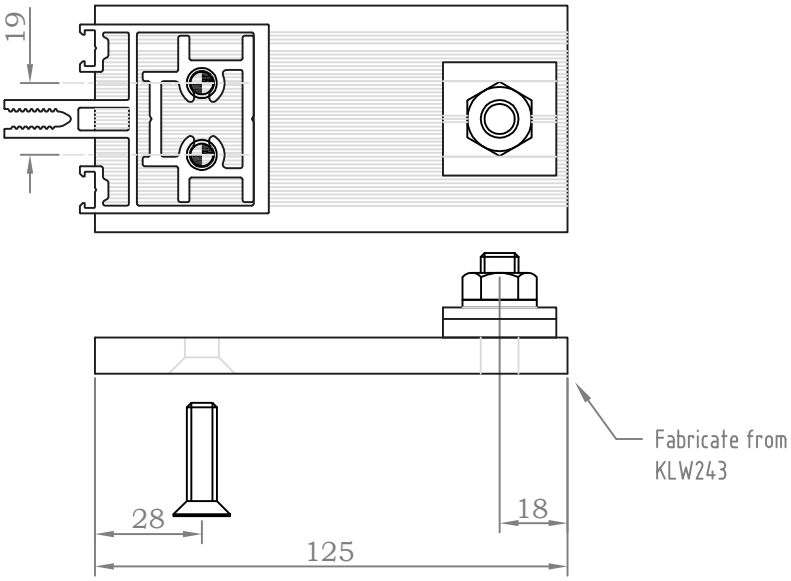

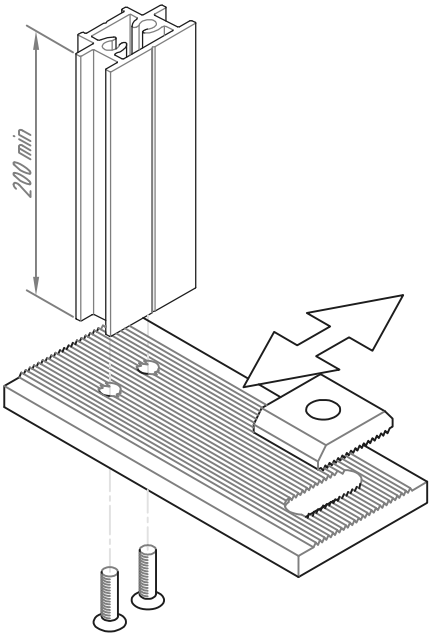

Typical Floor Spigot Details
Drill & C'sink for M8 x 30 m/c Screws
All Fixings Should be Checked by
a Structural Engineer
Floor Plate May Require Welding
to the Spigot Section

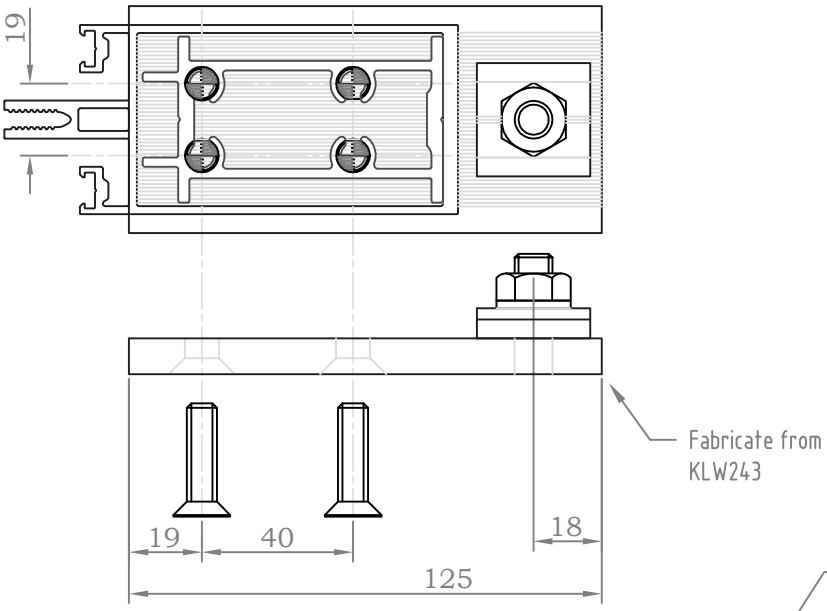

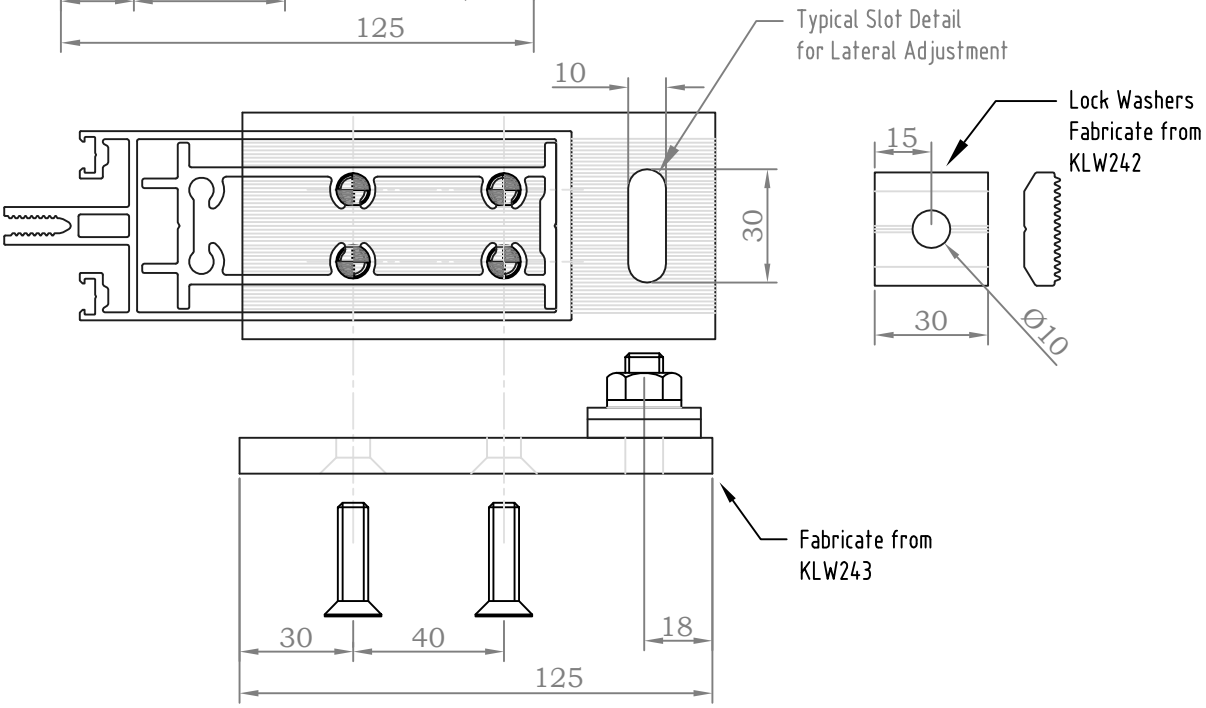

Floor & Soffit Spigot ECW50.7.104

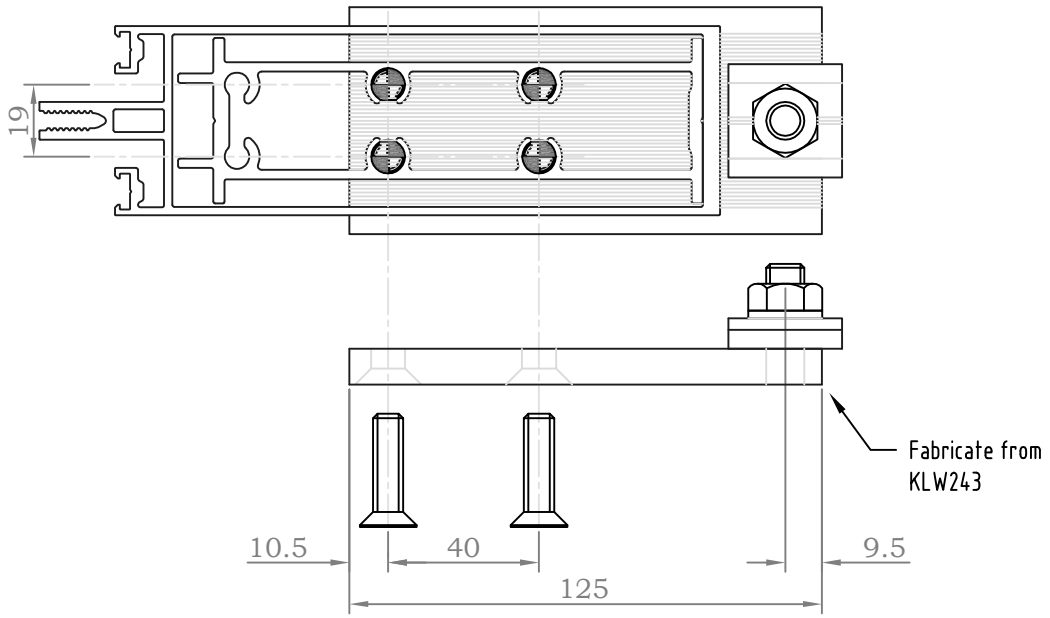

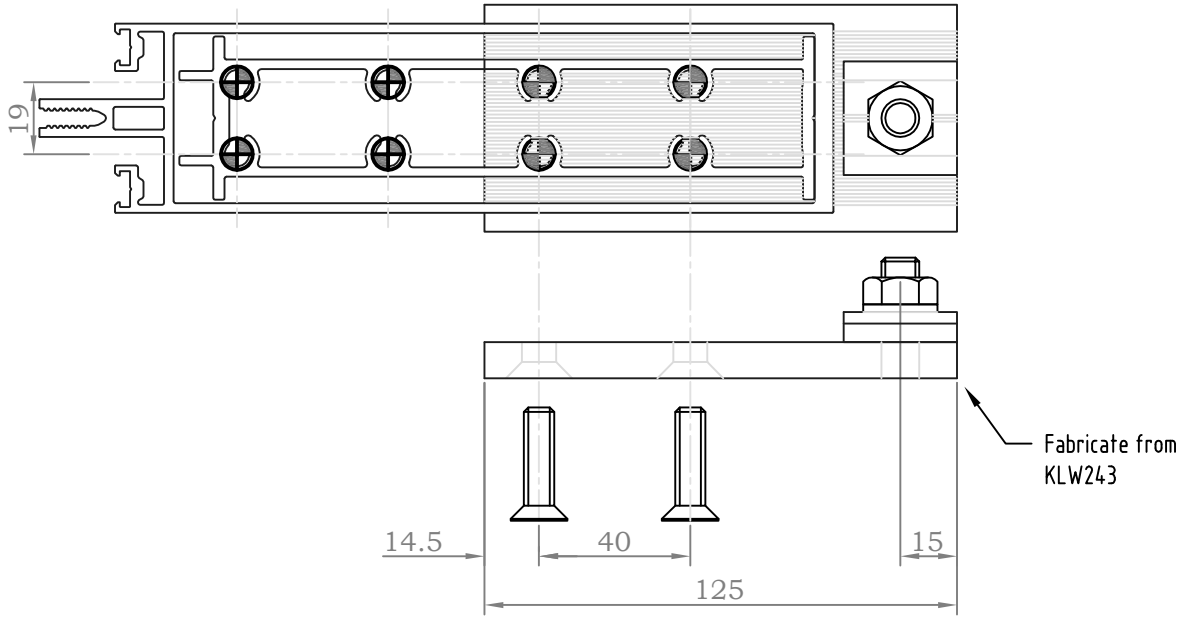

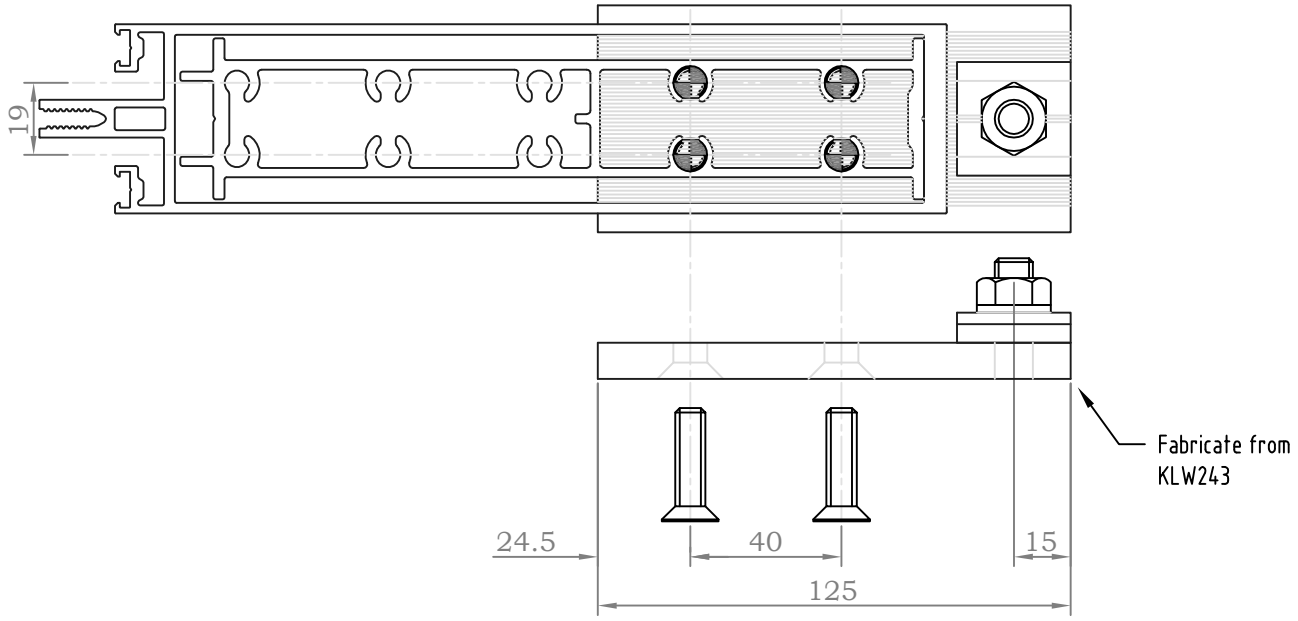

Jul 16

Installation Details - Jamb

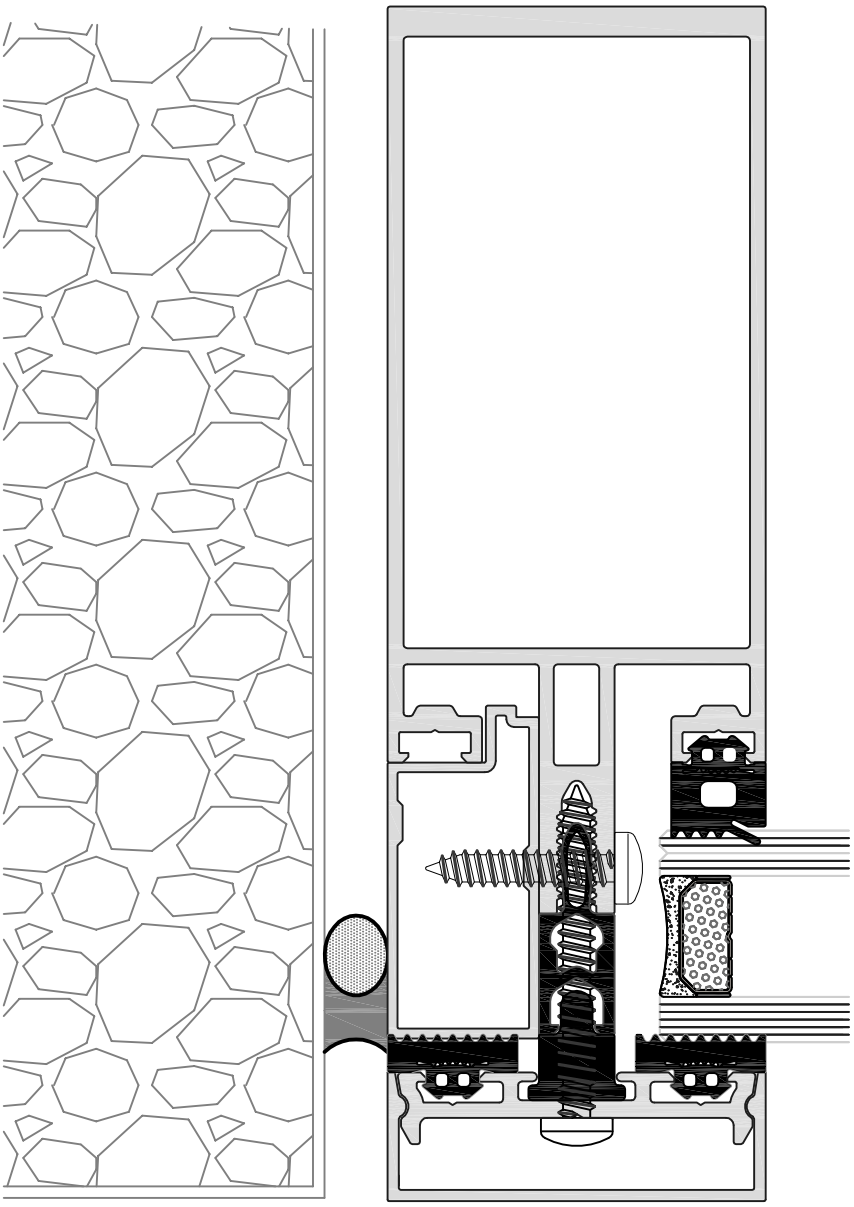

It is Important to Maintain a
Continuous Seal Around the
Perimeter of the Curtain Wall.
Careful Consideration Should
be Given to Interface Details
& Building / Structural Movement

Installation Details - Head & Cill ECW50.7.106

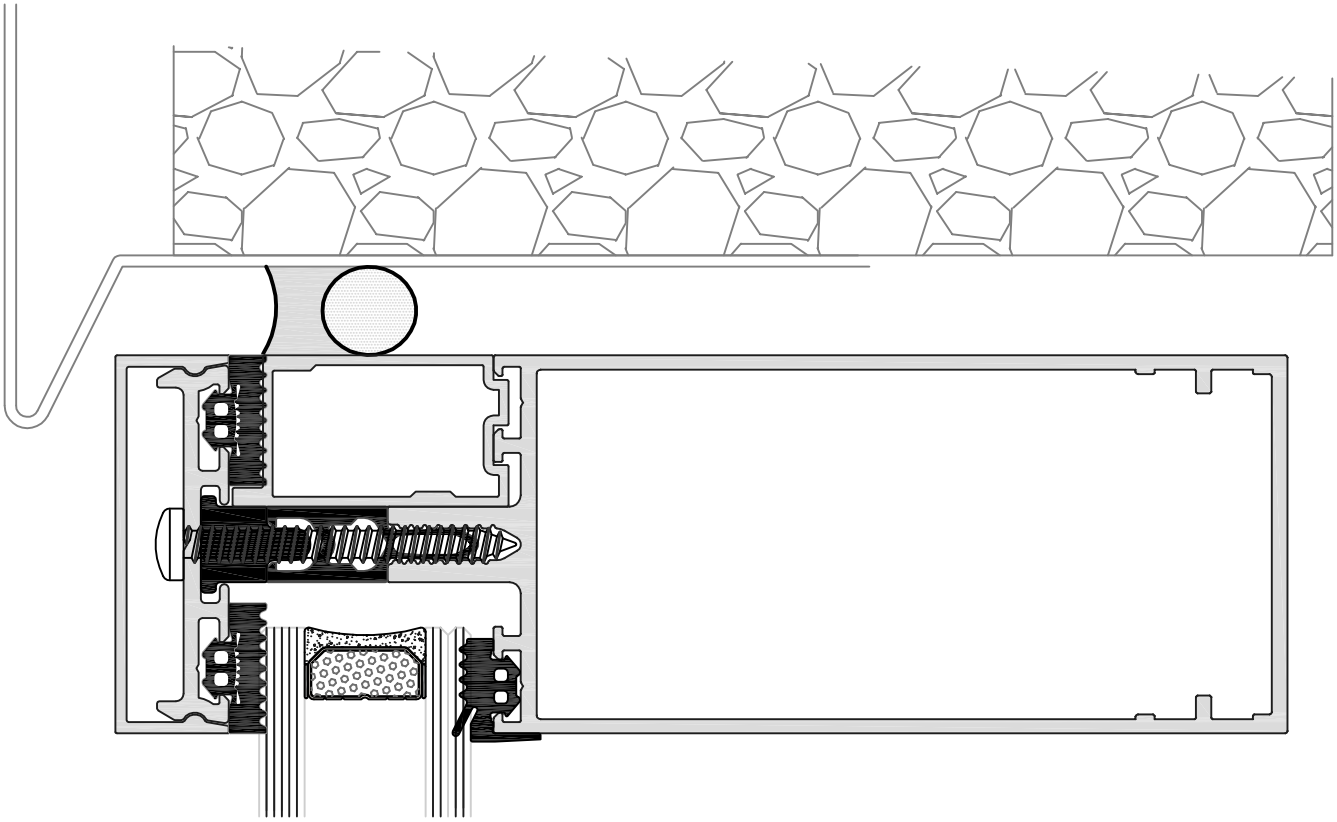

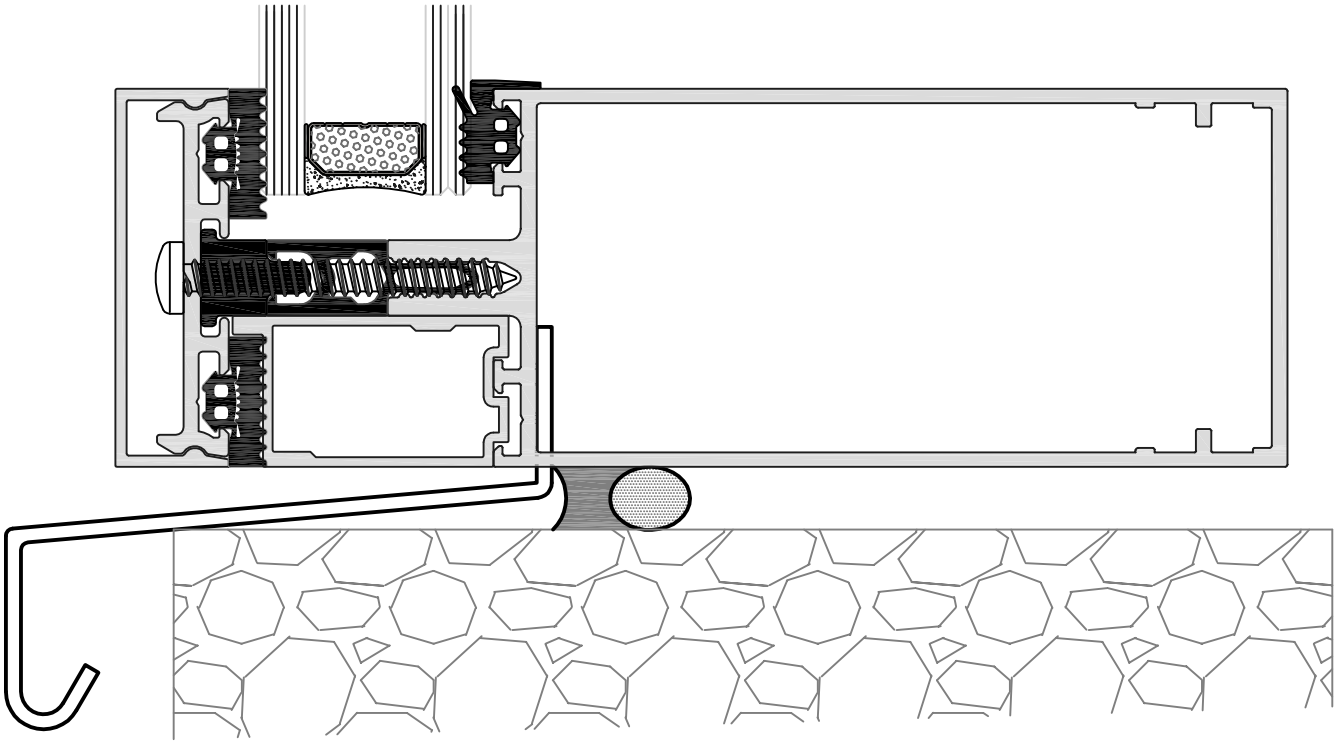

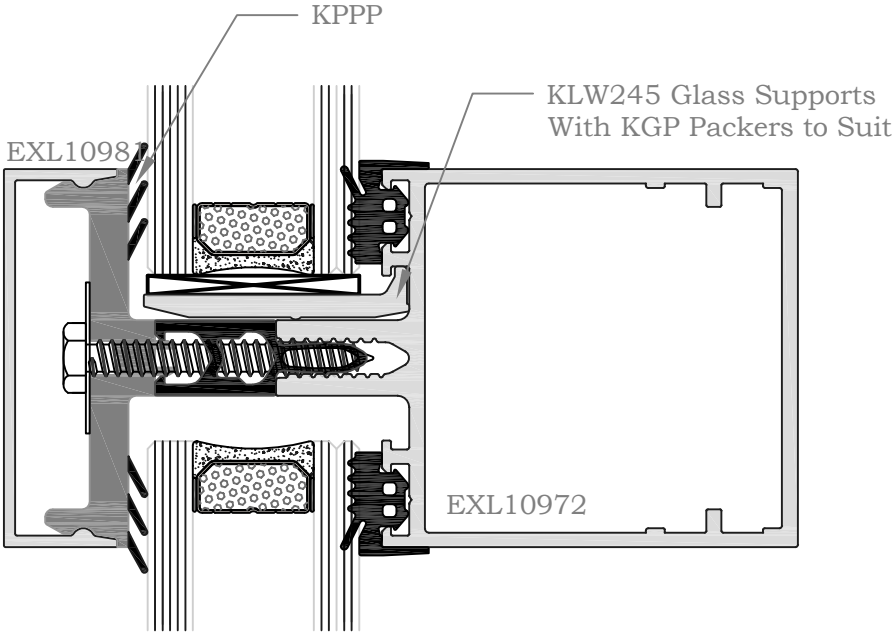
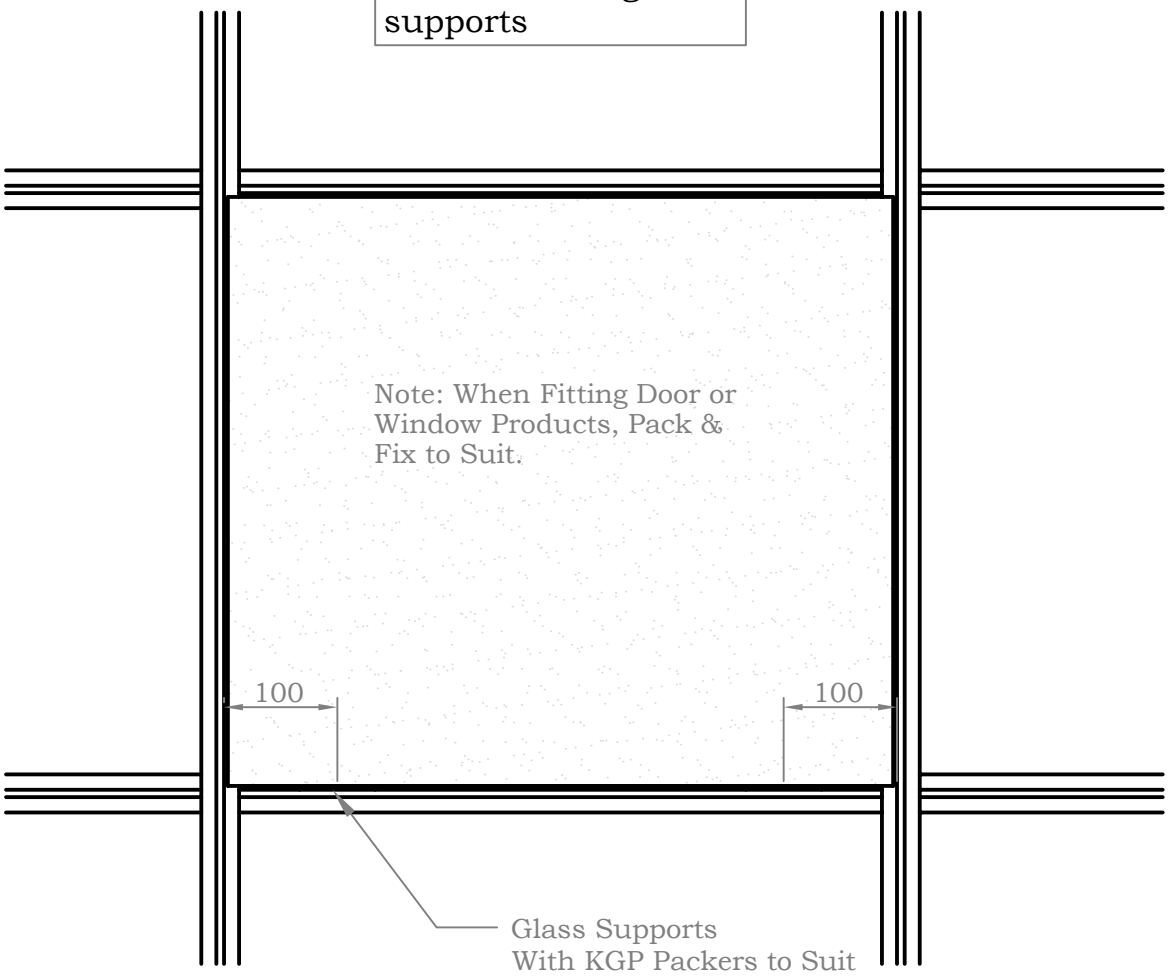
Note:
See section ECW50.4 for alternative glass supports